PIONEER
The Art of Entertainment

Service Manual

ORDER NO.
RRV 1 5 8 6

STEREO AMPLIFIER

A-205
A-105

● Refer to the service manual ARP2852 for A-203/HEXJ.

THIS MANUAL IS APPLICABLE TO THE FOLLOWING MODEL(S) AND TYPE(S).

Type	Model		Power Requirement	The voltage can be converted by the following method.
	A-205	A-105		
SDXJ	O	O	AC100V/120 – 127V/220V/240V	With the voltage selector
HLXJ	O	O	AC220 – 230V	AC240V, ✱
HVXJ	–	O	AC230V	AC220 – 230V, ✱
HYXJ/EW	–	O	AC220 – 230V	AC240V, ✱
HYXJ/GR	–	O	AC220 – 230V	AC240V, ✱

✱ : Alter the wiring of the Power-supply block at the primary winding of Power-transformer referring to the "Line Voltage Selection" described in Service Manual.

PIONEER ELECTRONIC CORPORATION 4-1, Meguro 1-Chome, Meguro-ku, Tokyo 153, Japan
PIONEER ELECTRONICS SERVICE, INC. P.O.Box 1760, Long Beach, CA 90801-1760, U.S.A.
PIONEER ELECTRONIC [EUROPE] N.V. Haven 1087, Keetberglaan 1, 9120 Melsele, Belgium
PIONEER ELECTRONICS ASIACENTRE PTE. LTD. 501 Orchard Road, #10-00 Lane Crawford Place, Singapore 0923

© PIONEER ELECTRONIC CORPORATION 1996

T-FZK APR. 1996 Printed in Japan

● CONTRAST OF MISCELLANEOUS PARTS

NOTES:

- *Parts marked by "NSP" are generally unavailable because they are not in our Master Spare Parts List.*
- *The ⚠ mark found on some component parts indicates the importance of the safety factor of the part. Therefore, when replacing, be sure to use parts of identical designation.*
- *Parts marked by "◉" are not always kept in stock. Their delivery time may be longer than usual or they may be unavailable.*

CONTRAST OF A-205/SDXJ, HLXJ AND A-203/HEXJ

A-205/SDXJ, HLXJ and A-203/HEXJ have the same construction except for the following:

Mark	Symbol & Description	Part No.			Remarks
		A-203/HEXJ	A-205/SDXJ	A-205/HLXJ	
NSP	AF assembly	AWK1787	AWK1823	AWK1787	
	SP assembly	AWZ5495	AWZ5525	AWZ5495	
⚠	T1 Power transformer (AC220 – 230V/240V)	ATS1538	Not used	ATS1538	
⚠	T1 Power transformer (AC110V/120 – 127V/220V/240V)	Not used	ATS1539	Not used	
⚠	Voltage selector (AC110V/120 – 127V/220V/240V)	Not used	AKX – 507	Not used	*
⚠	AC outlet	Not used	AKP – 515	Not used	*
⚠	FU2 Fuse (T1.25A)	Not used	REK1023	Not used	*
⚠	AC power cord	ADG1154	ADG1158	ADG1154	
	Rear panel	ANC2173	ANC7414	ANC7415	
	Insulator (for front/rear)	PNW1912	Not used	Not used	
	Insulator (for front)	Not used	DXA1490	DXA1490	
	Foot (for rear)	Not used	AEC1505	AEC1505	
	Front panel	AMB2231	AMB7358	AMB7358	
	Operating instructions (English/French/German/Italian/ Swedish/Spanish/Dutch/Portuguese)	AEC1302	Not used	Not used	
	Operating instructions (English/Spanish/Chinese)	Not used	ARE7074	ARE7074	
	Packing case	AHD2672	AHD7293	AHD7293	
	Sheet	AEE1014	AEE7010	AEE7010	
	Paper protector A	AHA1660	AHA7061	AHA7061	
	Paper protector B	AHA1661	AHA7062	AHA7062	
	Paper protector C	AHA1662	AHA7063	AHA7063	
	Paper protector D	Not used	AHA7064	AHA7064	For packing
	Caution 220V label	Not used	ARR1003	Not used	For accessory

NOTE* : Refer to page5 in the service manual ARP2852.

SP ASSEMBLY

AWZ5525 and AWZ5495 have the same construction except for the following:

Mark	Symbol & Description	Part No.		Remarks
		AWZ5495	AWZ5525	
⚠	C403 – C406	CKCYB472K50	Not used	
	C409	ACG7020 (0.01μF/250V)	ACG1002 (0.01μF/400V)	

CONTRAST OF A-105/SDXJ, HLXJ, HVXJ, HYXJ/EW, HYXJ/GR AND A-103/HEXJ

A-105/SDXJ, HLXJ, HVXJ, HYXJ/EW, HYXJ/GR AND A-103/HEXJ have the same construction except for the following:

Mark	Symbol & Description	Part No.						Remarks
		A-103 HEXJ	A-105 SDXJ	A-105 HLXJ	A-105 HVXJ	A-105 HYXJ/EW	A-105 HYXJ/GR	
NSP	AF assembly	AWK1788	AWK1826	AWK1788	AWK1825	AWK1788	AWK1788	
	SP assembly	AWZ5499	AWZ5530	AWZ5499	AWZ5529	AWZ5499	AWZ5499	
	POWER SW assembly	AWZ5496	AWZ5496	AWZ5496	AWZ5526	AWZ5496	AWZ5496	
⚠	T1 Power transformer (AC220 – 230V/240V)	ATS1540	Not used	ATS1540	ATS1540	ATS1540	ATS1540	
⚠	T1 Power transformer (AC110V/120 – 127V/220V/240V)	Not used	ATS1541	Not used	Not used	Not used	Not used	
⚠	Voltage selector (AC110V/120 – 127V/220V/240V)	Not used	AKX – 507	Not used	Not used	Not used	Not used	*
⚠	AC outlet	Not used	AKP – 515	Not used	Not used	Not used	Not used	*
⚠	FU2 Fuse (T800mA)	Not used	REK1021	Not used	Not used	Not used	Not used	*
⚠	AC power cord	ADG1154	ADG1158	ADG1154	ADG1156	ADG1154	ADG1154	
⚠	Fuse (T5A)(With in AC pulg)	Not used	Not used	Not used	AEK1046	Not used	Not used	
	Rear panel	ANC2177	ANC7418	ANC7417	ANC7419	ANC7416	ANC7416	
	Insulator	PNW1912	Not used	Not used	PNW1912	PNW1912	PNW1912	
	Foot	Not used	AEC1505	AEC1505	Not used	Not used	Not used	
	Front panel	AMB2232	AMB7360	AMB7360	AMB7359	AMB7359	AMB7359	
	Operating instructions (English/French/German/Italian/ Swedish/Spanish/Dutch/Portuguese)	AEC1302	Not used	Not used	Not used	ARE7073	Not used	
	Operating instructions (English)	Not used	Not used	Not used	ARB7075	Not used	Not used	
	Operating instructions (German)	Not used	Not used	Not used	Not used	Not used	ARC7118	
	Operating instructions (English/Spanish/Chinese)	Not used	ARE7074	ARE7074	Not used	Not used	Not used	
	Packing case	AHD2673	AHD7295	AHD7295	AHD7312	AHD7294	AHD7294	
	Paper protector A	AHA1660	AHA7061	AHA7061	AHA7061	AHA7061	AHA7061	
	Paper protector B	AHA1661	AHA7062	AHA7062	AHA7071	AHA7062	AHA7062	
	Paper protector C	AHA1662	AHA7063	AHA7063	AHA7072	AHA7063	AHA7063	
	Paper protector D	Not used	AHA7064	AHA7064	AHA7073	AHA7064	AHA7064	For packing
NSP	Air cap	Not used	Not used	Not used	AHG1087	Not used	Not used	For packing
	Caution 220V label	Not used	ARR1003	Not used	Not used	Not used	Not used	For accessory

NOTE* : Refer to page5 in the service manual ARP2852.

SP ASSEMBLY

AWZ5529, AWZ5530 and AWZ5499 have the same construction except for the following:

Mark	Symbol & Description	Part No.			Remarks
		AWZ5499	AWZ5529	AWZ5530	
	C403, C404	CKCYB472K50	CKCYB472K50	Not used	
⚠	C409	ACG7020 (0.01μF/250V)	ACG7020 (0.01μF/250V)	ACG1002 (0.01μF/400V)	
⚠	CN6 (AC INLET – 1P)	AKP1132	AKP1133	AKP1132	

POWER SW ASSEMBLY

Although AWZ5526 and AWZ5496 are different in part number, they have the same service parts.

PIONEER®
The Art of Entertainment

Service Manual

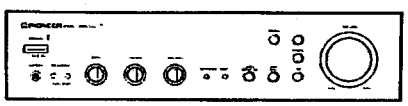

The illustration shows model A-203.

ORDER NO.
ARP2852

STEREO AMPLIFIER

A-203
A-103

THIS MANUAL IS APPLICABLE TO THE FOLLOWING MODEL(S) AND TYPE(S).

Type	Model		Power Requirement	The voltage can be converted by the following method.
	A-203	A-103		
HEXJ	O	O	AC220—230V	AC240V, *
HBXJ	O	O	AC240V	AC220—230V, *
HEWZXJ	O	O	AC220—230V	AC240V, *
HLXJ	O	O	AC220—230V	AC240V, *
SDXJ	O	O	AC110V/120—127V/220V/240V	With the voltage selector
YPWXJ	—	O	AC240V	—

* : Alter the wiring of the Power-supply block at the primary winding of Power-transformer referring to the "Line Voltage Selection" described in Service Manual.

- **For the following: A-203/HBXJ, HEWZXJ, HLXJ and SDXJ; A-103/HBXJ, HEWZXJ, HLXJ, SDXJ and YPWXJ, refer to page 22.**

CONTENTS

1. DISASSEMBLY 2
2. EXPLODED VIEWS, PACKING AND PARTS LIST ... 3
3. SCHEMATIC DIAGRAM 6
4. PCB CONNECTION DIAGRAMS 9
5. BLOCK DIAGRAM 17
6. PCB PARTS LIST 18
7. IC INFORMATION 21
8. FOR A-203/HBXJ, HEWZXJ, HLXJ SDXJ, A-103/HBXJ,HEWZXJ, HLXJ, SDXJ AND YPWXJ ... 22
9. PANEL FACILITIES 25
10. SPECIFICATIONS 28

PIONEER ELECTRONIC CORPORATION 4-1, Meguro 1-Chome, Meguro-ku, Tokyo 153, Japan
PIONEER ELECTRONICS SERVICE INC. P.O. Box 1760, Long Beach, California 90801 U.S.A.
PIONEER ELECTRONICS OF CANADA, INC. 300 Allstate Parkway Markham, Ontario L3R 0P2 Canada
PIONEER ELECTRONIC [EUROPE] N.V. Haven 1087 Keetberglaan 1, 9120 Melsele, Belgium
PIONEER ELECTRONICS AUSTRALIA PTY. LTD. 178-184 Boundary Road, Braeside, Victoria 3195, Australia TEL: [03] 580-9911

© PIONEER ELECTRONIC CORPORATION 1994

O-FFO APR. 1994 Printed in Japan

1. DISASSEMBLY

● CHECKING FOR POWER AMP ASSY

1. Remove the bonnet.

2. Remove the VOLUME knob and unscrew nut the ① (Fig. 1).

3. Unscrew the fastening screws ② of the front panel (2 upper and 5 lower screws.).

4. Unscrew the fastening screws ③ (1 screw) and ④ (2 screws) of the RADIATOR.

5. Lift up the RADIATOR (in the direction of the arrow ⑤) approximately 5mm, and remove it from the chassis hook.

6. Remove the lower hooks ⑥ of the front panel (2 places).

7. Slowly remove the front panel together with the RADIATOR. When doing this, be careful so that the flat cable ⑦ form CN 1 does not get caught.

8. When the VOLUME knob shaft ⑨ has been distanced from the front panel, lower the fins of the RADIATOR as shown in Fig. 2 and raise the shaft.

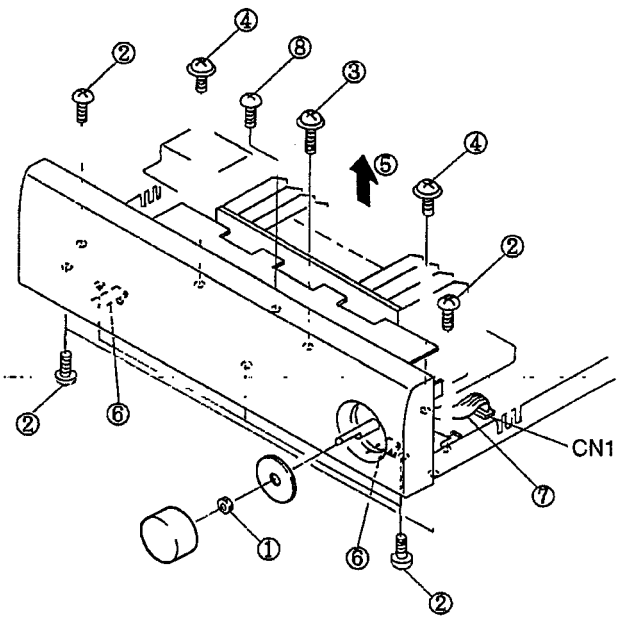

Fig. 1

● HOW TO REMOVE THE POWER AMP ASSY

1. Remove the fastening screw ③ of the RADIATOR (1 screw) and ④ (2 screws) and the center fastening screw ⑧ (1 screw) of the POWER AMP ASSY (Fig. 1).

2. Lift up the RADIATOR (in the direction of the arrow ⑤) approximately 5mm, and remove it from the chassis hook.

3. Pull the RADIATOR backward and remove the POWER AMP ASSY and RADIATOR together.

Note : The CONTROL ASSY of the front panel and the POWER AMP ASSY are connected only with connectors, and they can the refore be easily removed by carrying out the above operations.

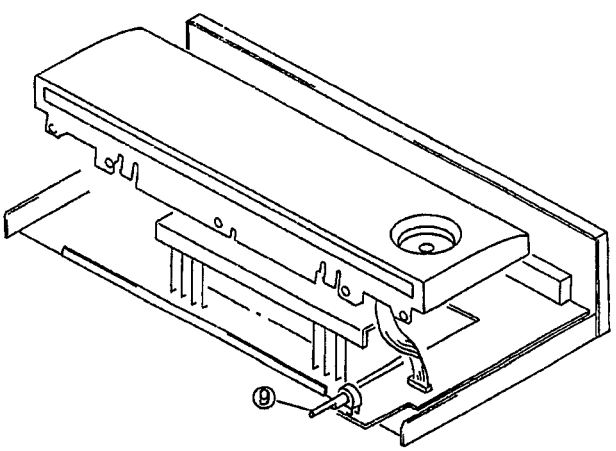

Fig.2

2. EXPLODED VIEWS, PACKING AND PARTS LIST

NOTES:
- *Parts marked by "NSP" are generally unavailable because they are not in our Master Spare Parts List.*
- *The ⚠ mark found on some component parts indicates the importance of the safety factor of the part. Therefore, when replacing, be sure to use parts of identical designation.*
- *Parts marked by "●" are not always kept in stock. Their delivery time may be longer than usual or they may be unavailable.*

Mark	No.	Description	Parts No.
⚠	1	Q3,Q4 TRANSISTOR (For A−203)	2SA1264N
⚠	1	Q3,Q4 TRANSISTOR (For A−103)	2SA1803
⚠	2	Q1,Q2 TRANSISTOR (For A−203)	2SC3181N
⚠	2	Q1,Q2 TRANSISTOR (For A−103)	2SC4688
⚠	3	T1 POWER TRANSFORMER (For A−203)	ATS1538
⚠	3	T1 POWER TRANSFORMER (For A−103)	ATS1540
	4	TERMINAL SCREW	AKE−031
⚠	5	FU1 FUSE (0.25A) (For A−203)	REK1023
⚠	5	FU1 FUSE (800mA) (For A−103)	REK1021
NSP	6	CHASSIS(MET)	ANA1228
	7	REAR PANEL (For A−203)	ANC2173
	7	REAR PANEL (For A−103)	ANC2177
NSP	8	RADIATOR (For A−203)	ANH1464
NSP	8	RADIATOR (For A−103)	ANH1465
	9	INSULATOR	PNW1912
	10	RING(MET)	ANG1917
	11	PCB HOLDER(MET)	ANG1918
	12	PCB SPACER(PLS)	AEC1566
	13	PCB SPACER(PLS)	AEC1567
	14	SHEET (A−203 only)	AEE1014
	15	BINDER	AEP−215
	16	PCB MOLD(PP)	AMR2533
	17	SCREW	ABA 298
	18	SCREW	ABA1018
	19	SCREW	ABA1027
	20	SCREW	ABA1082
	21	SCREW (STEEL)	ABA1095
	22	SCREW (STEEL)	ABA1193
	23	SCREW	BBT30P080FZK
	24	SCREW	BCZ30P080FZK
	25	SCREW	BPZ26P080FMC
	26	NUT	NK70PUC
	27	SCREW	VPZ30P100FMC
	28	LED LENS	AAK2552
	29	NAME PLATE	PAM1608
	30	ROUND KNOB L (PLS)	AAB1340
	31	ROUND KNOB S (PLS)	AAB2221
	32	POWER BUTTON	AAD2539
	33	FUNCTION BUTTON	AAD2540
	34	PUSH BUTTON (PLS)	AAD4045
	35	BONNET CASE	ANE1464
	36	FRONT PANEL (For A−203)	AMB2231
	36	FRONT PANEL (For A−103)	AMB2232
	37	FUNCTION ASSY	AWZ5492

Mark	No.	Description	Parts No.
	38	CONTROL ASSY	AWZ5493
	39	HEADPHONE ASSY (For A−203)	AWZ5494
	39	HEADPHONE ASSY (For A−103)	AWZ5498
	40	SP ASSY (For A−203)	AWZ5495
	40	SP ASSY (For A−103)	AWZ5499
	41	POWER SW ASSY	AWZ5496
	42	TRANS ASSY (For A−203)	AWZ5497
	42	TRANS ASSY (For A−103)	AWZ5538
	43	POWER AMP ASSY (For A−203)	AWZ5500
	43	POWER AMP ASSY (For A−103)	AWZ5501
⚠	44	AC POWER CORD	ADG1154
	45	OPE. INSTRUCTIONS (English, French, German, Italian, Dutch, Swedish, Spanish, Portuguese)	ARE1302
	46	PAPER PROTECTOR A	AHA1660
	47	PAPER PROTECTOR B	AHA1661
	48	PAPER PROTECTOR C	AHA1662
	49	PACKING CASE (For A−203)	AHD2672
	49	PACKING CASE (For A−103)	AHD2673
	50	PACKING SHEET	AHG1212

● PACKING

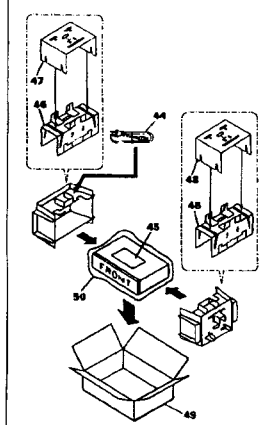

● EXPLODED VIEWS

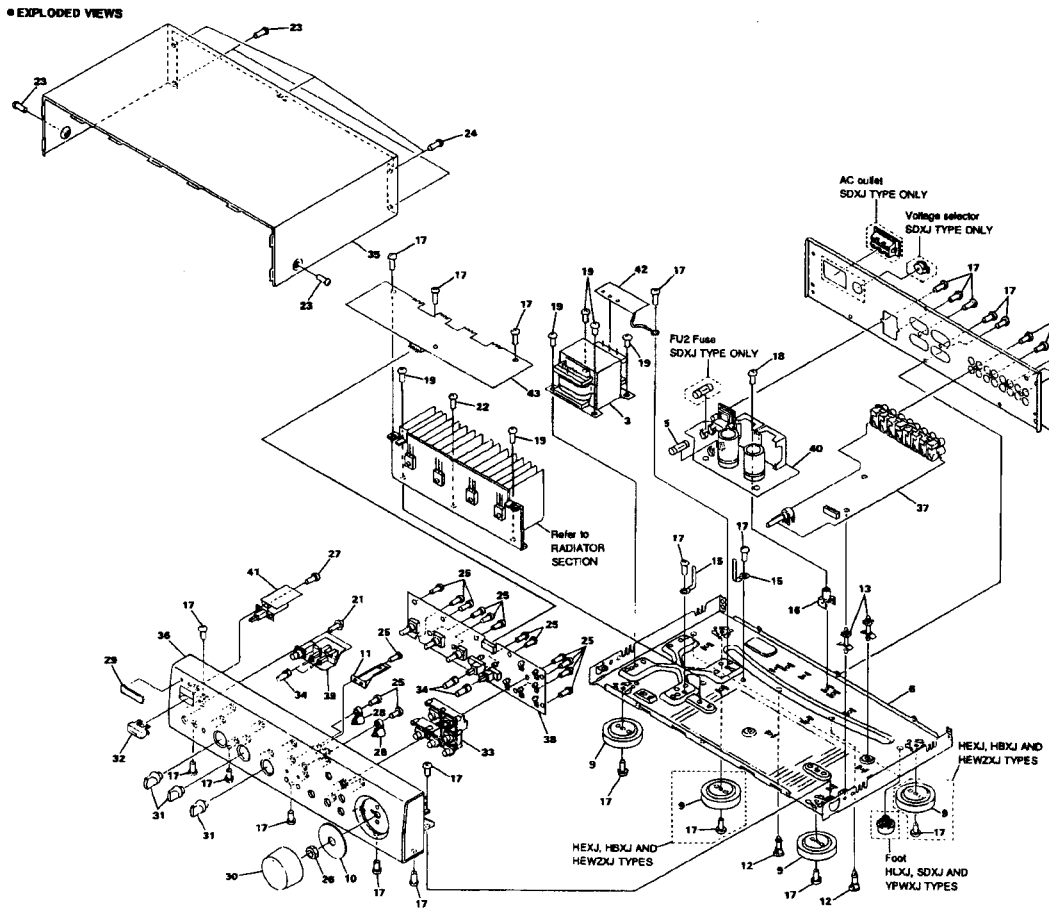

● RADIATOR SECTION

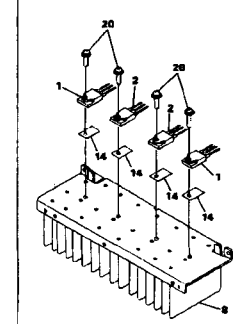

NOTE : Screws adjacent to ▼ mark on product are used for disassembly.

3. SCHEMATIC DIAGRAM

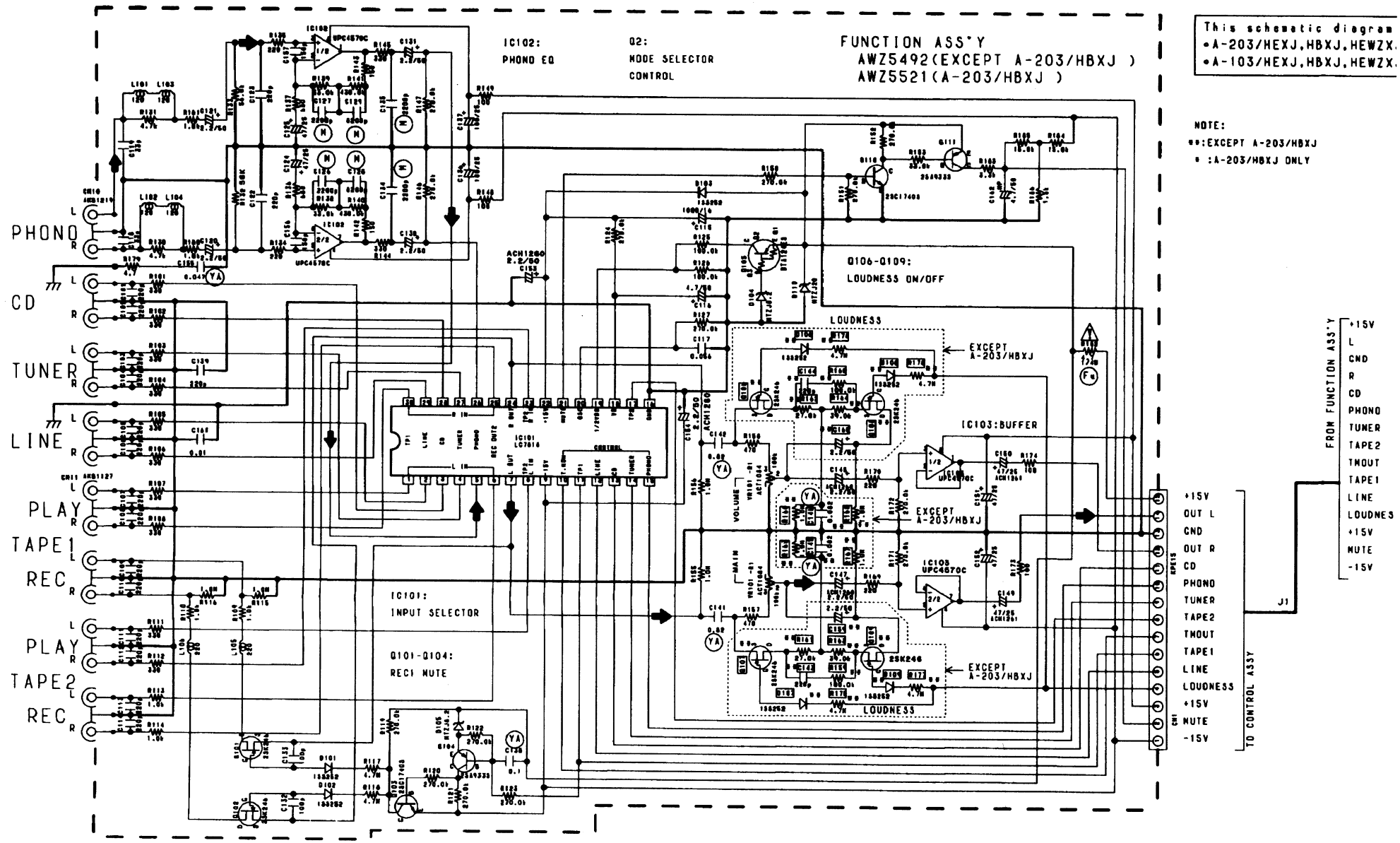

	A-203	A-103
R371	3.9K	3.3K

	A-203	A-103
Q1,Q2	2SC3181N	2SC4686
Q3,Q4	2SA1264N	2SA1803

	A-203	A-103
R359	100K	82K
R362,R363	330	270

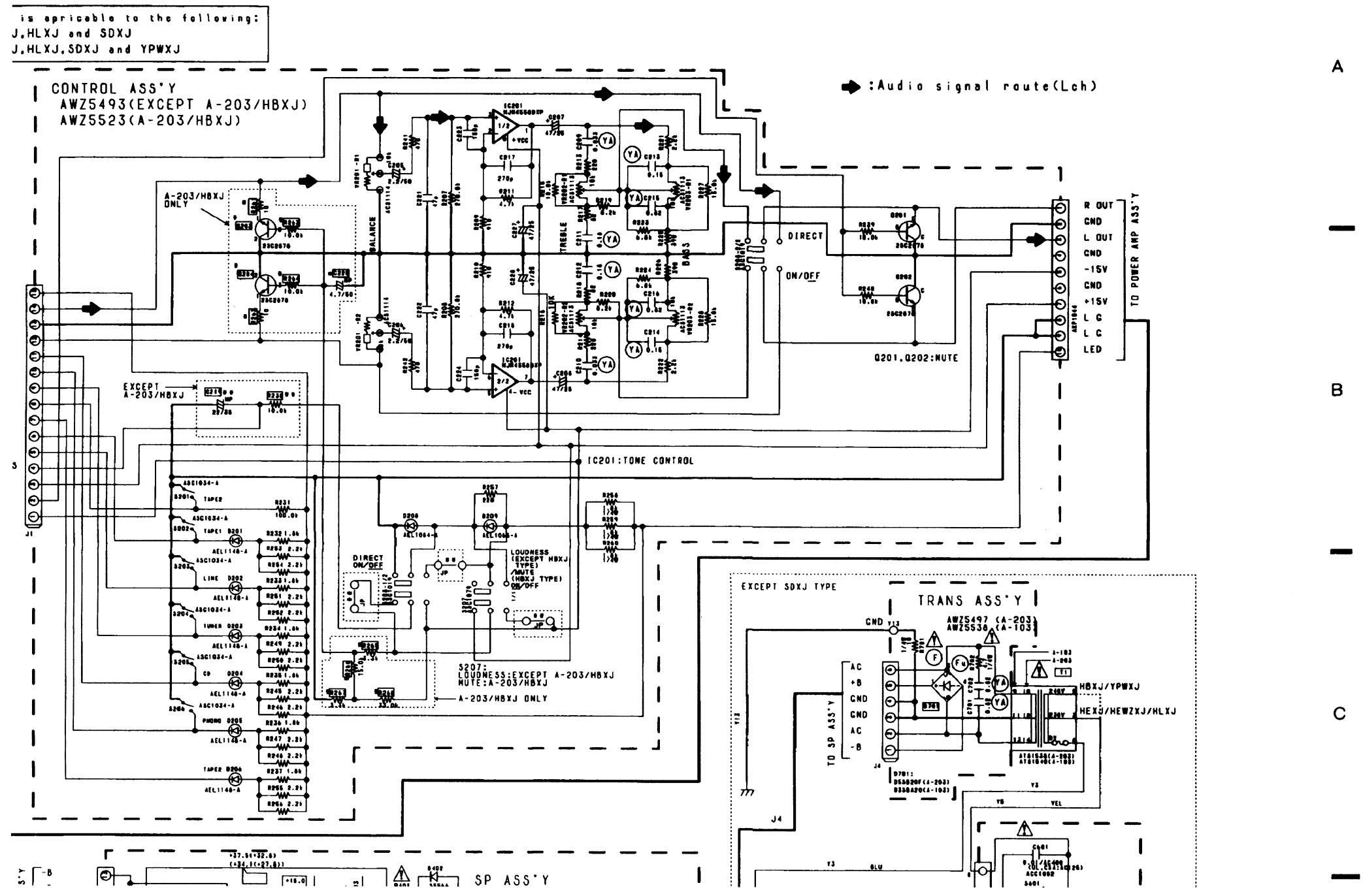
is apricable to the following:
J,HLXJ and SDXJ
J,HLXJ,SDXJ and YPWXJ
CONTROL ASS'Y
AWZ5493(EXCEPT A-203/HBXJ)
AWZ5523(A-203/HBXJ)
:Audio signal route(Lch)
A-203/HBXJ ONLY
EXCEPT A-203/HBXJ
BALANCE
TREBLE
BASS
DIRECT
ON/OFF
Q201,Q202:MUTE
R OUT
GND
L OUT
GND
-15V
GND
+15V
L G
L C
LED
TO POWER AMP ASS'Y
IC201:TONE CONTROL
TAPE2
TAPE1
LINE
TUNER
CD
PHONO
TAPE2
DIRECT ON/OFF
LOUDNESS (EXCEPT HBXJ TYPE) /MUTE (HBXJ TYPE) ON/OFF
S207:
LOUDNESS:EXCEPT A-203/HBXJ
MUTE:A-203/HBXJ
A-203/HBXJ ONLY
EXCEPT SDXJ TYPE
TRANS ASS'Y
AWZ5497 (A-203)
AWZ5536 (A-103)
GND
AC
+B
GND
GND
AC
-B
TO SP ASS'Y
HBXJ/YPWXJ
HEXJ/HEWZXJ/HLXJ
SP ASS'Y
A
B
C

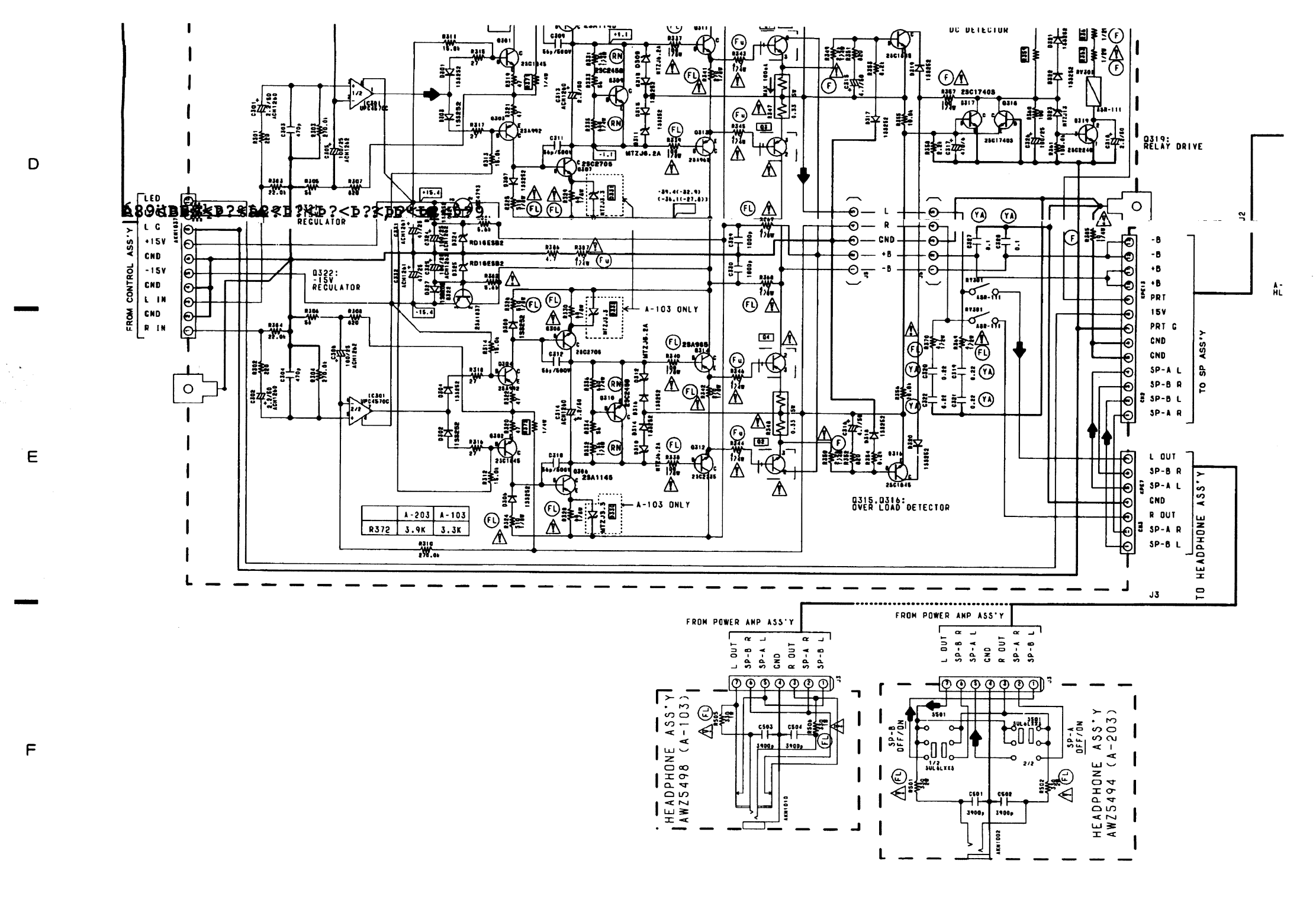
FROM CONTROL ASS'Y
LED
L G
+15V
GND
-15V
GND
L IN
GND
R IN
0322: -15V REGULATOR
A-103 ONLY
A-203 A-103
R372 3.9K 3.3K
0315,0316: OVER LOAD DETECTOR
DC DETECTOR
0319: RELAY DRIVE
L
R
GND
+B
-B
-B
-B
+B
+B
PRT
15V
PRT G
GND
GND
SP-A L
SP-B R
SP-B L
SP-A R
TO SP ASS'Y
L OUT
SP-B R
SP-A L
GND
R OUT
SP-A R
SP-B L
TO HEADPHONE ASS'Y
FROM POWER AMP ASS'Y
HEADPHONE ASS'Y AWZ5498 (A-103)
HEADPHONE ASS'Y AWZ5494 (A-203)
SP-B OFF/ON
SP-A OFF/ON

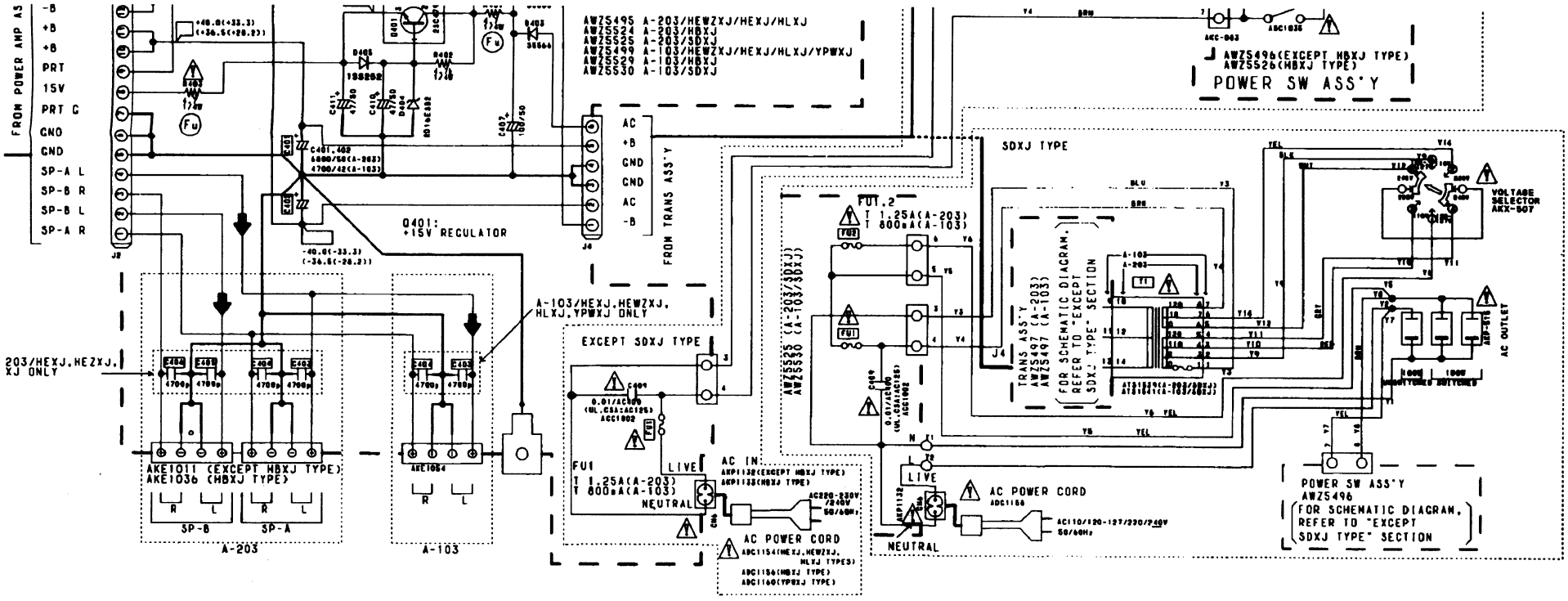

NOTE FOR SCHEMATIC DIAGRAMS (Type 1A)

1. **When ordering service parts, be sure to refer to "PARTS LIST of EXPLODED VIEWS" or "PCB PARTS LIST".**

2. **Since these are basic circuits, some parts of them or the values of some components may be changed for improvement.**

3. **RESISTORS:**
   Unit: k:kΩ, M:MΩ, or Ω unless otherwise noted.
   Rated power: 1/4W, 1/6W, 1/8W, 1/10W unless otherwise noted.
   Tolerance: (F): ±1%, (G): ±2%, (K): ±10%, (M): ±20% or ±5% unless otherwise noted.

4. **CAPACITORS:**
   Unit: p:pF or μF unless otherwise noted.
   Ratings: capacitor (μF)/ voltage (V) unless otherwise noted.
   Rated voltage: 50V except for electrolytic capacitors.

5. **COILS:**
   Unit: m:mH or μH unless otherwise noted.

6. **VOLTAGE AND CURRENT:**
   [V] : Signal voltage at rated output.
   [ ] or ← V :
   DC voltage (V) at no input signal unless otherwise noted.
   Value in ( ) is DC voltage at rated power.
   Value in [ ] is DC voltage for A-103.
   ⇦ mA or ← mA :
   DC current at no input signal unless otherwise noted.

7. **OTHERS:**
   - ⊘ or ⊘ : Adjusting point.
   - ◄ : Measurement point.
   - The ⚠ mark found on some component parts indicates the importance of the safety factor of the parts. Therefore, when replacing, be sure to use parts of identical designation.

8. **SCH—□ ON THE SCHEMATIC DIAGRAM:**
   - SCH—□ indicates the drawing number of the schematic diagram. (SCH stands for schematic diagram.)

9. **SWITCHES** (Underline indicates switch position):

CONTROL ASSY
- S201 : TAPE2 MONITOR
- S202 : TAPE1/DAT
- S203 : LINE
- S204 : TUNER
- S205 : CD
- S206 : PHONO
- S207 : LOUDNESS (Except HBXJ TYPE) MUTING (HBXJ TYPE ONLY)
- S208 : DIRECT ON-OFF

HEADPHONE ASSY
- S501-1 : A(SPEAKERS)ON-OFF
- S501-2 : B(SPEAKERS)ON-OFF (A-203 ONLY)

POWER SW ASSY
- S601 : POWER

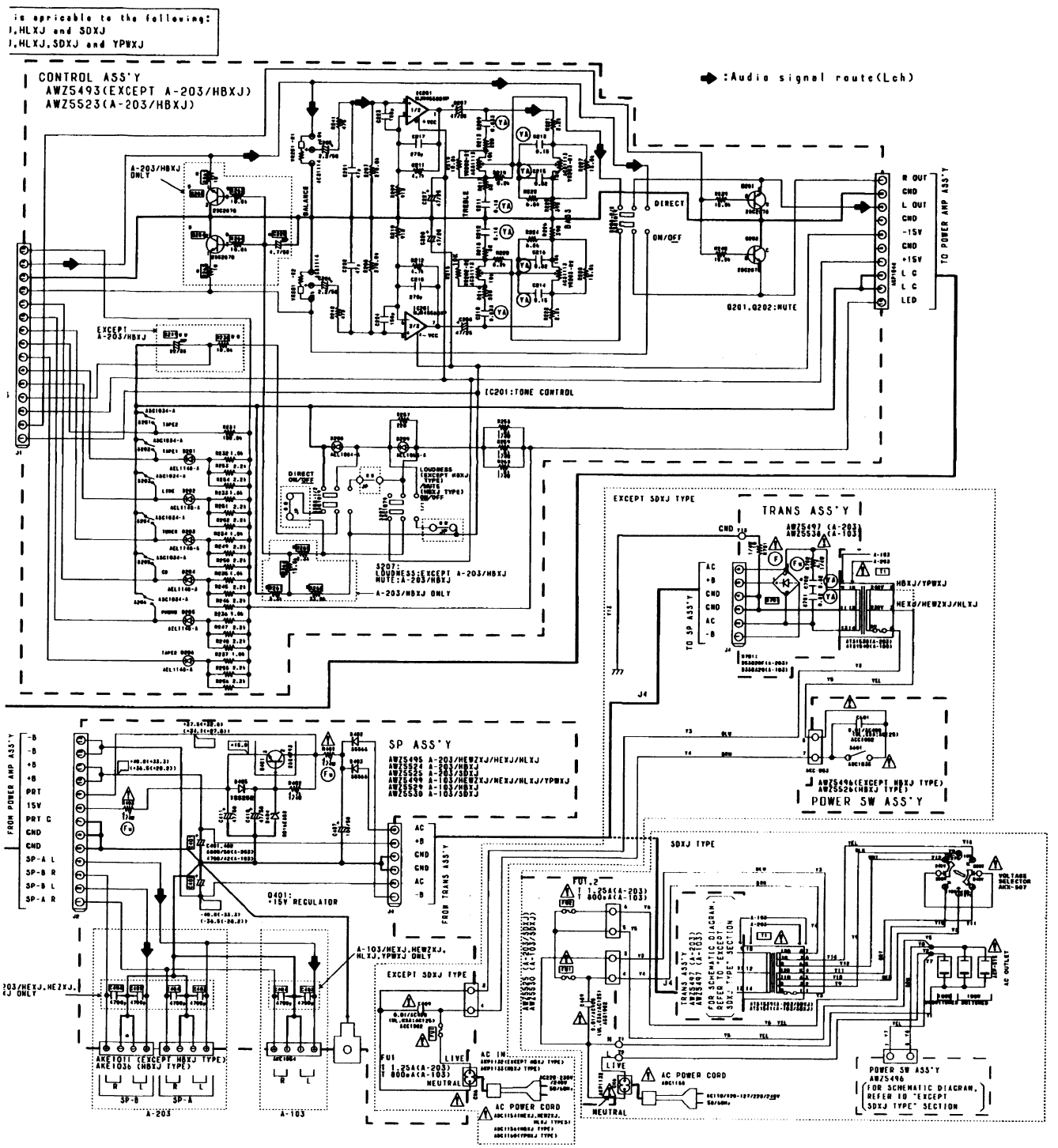

NOTE FOR SCHEMATIC DIAGRAMS (Type 1A)

1. **When ordering service parts, be sure to refer to "PARTS LIST of EXPLODED VIEWS" or "PCB PARTS LIST".**
2. **Since these are basic circuits, some parts of them or the values of some components may be changed for improvement.**
3. **RESISTORS:**
   Unit: k:kΩ, M:MΩ, or Ω unless otherwise noted.
   Rated power: 1/4W, 1/6W, 1/8W, 1/10W unless otherwise noted.
   Tolerance: (F): ±1%, (G): ±2%, (K): ±10%, (M): ±20% or ±5% unless otherwise noted.
4. **CAPACITORS:**
   Unit: p:pF or μF unless otherwise noted.
   Ratings: capacitor (μF)/ voltage (V) unless otherwise noted.
   Rated voltage: 50V except for electrolytic capacitors.
5. **COILS:**
   Unit: m:mH or μH unless otherwise noted.
6. **VOLTAGE AND CURRENT:**
   V : Signal voltage at rated output.
   or − V :
   DC voltage (V) at no input signal unless otherwise noted.
   Value in ( ) is DC voltage at rated power.
   Value in [ ] is DC voltage for A-103.
   mA or − mA :
   DC current at no input signal unless otherwise noted.
7. **OTHERS:**
   - ⊘ or ● : Adjusting point.
   - ◄ : Measurement point.
   - The ⚠ mark found on some component parts indicates the importance of the safety factor of the parts. Therefore, when replacing, be sure to use parts of identical designation.
8. **SCH−□ ON THE SCHEMATIC DIAGRAM:**
   - SCH−□ indicates the drawing number of the schematic diagram. (SCH stands for schematic diagram.)
9. **SWITCHES (Underline indicates switch position):**

CONTROL ASSY	HEADPHONE ASSY
S201 : TAPE2 MONITOR	S501-1 : A(SPEAKERS)ON-OFF
S202 : TAPE1/DAT	S501-2 : B(SPEAKERS)ON-OFF (A-203 ONLY)
S203 : LINE	
S204 : TUNER	POWER SW ASSY
S205 : CD	S601 : POWER
S206 : PHONO	
S207 : LOUDNESS (Except HBXJ TYPE) MUTING (HBXJ TYPE ONLY)	
S208 : DIRECT ON-OFF	

3. SCHEMATIC DIAGRAM

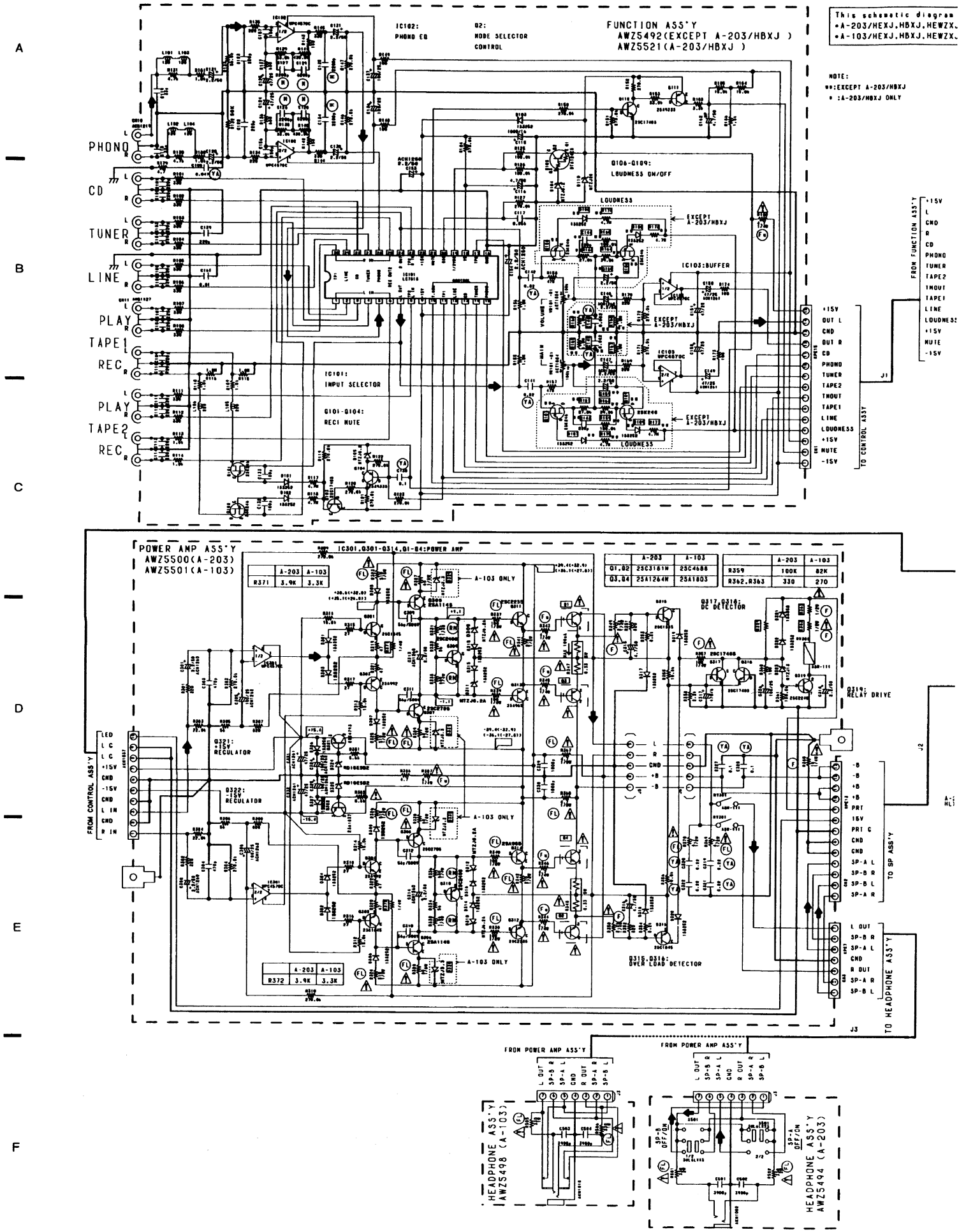

4. PCB CONNECTION DIAGRAMS

● This diagram is viewed from the foil side.

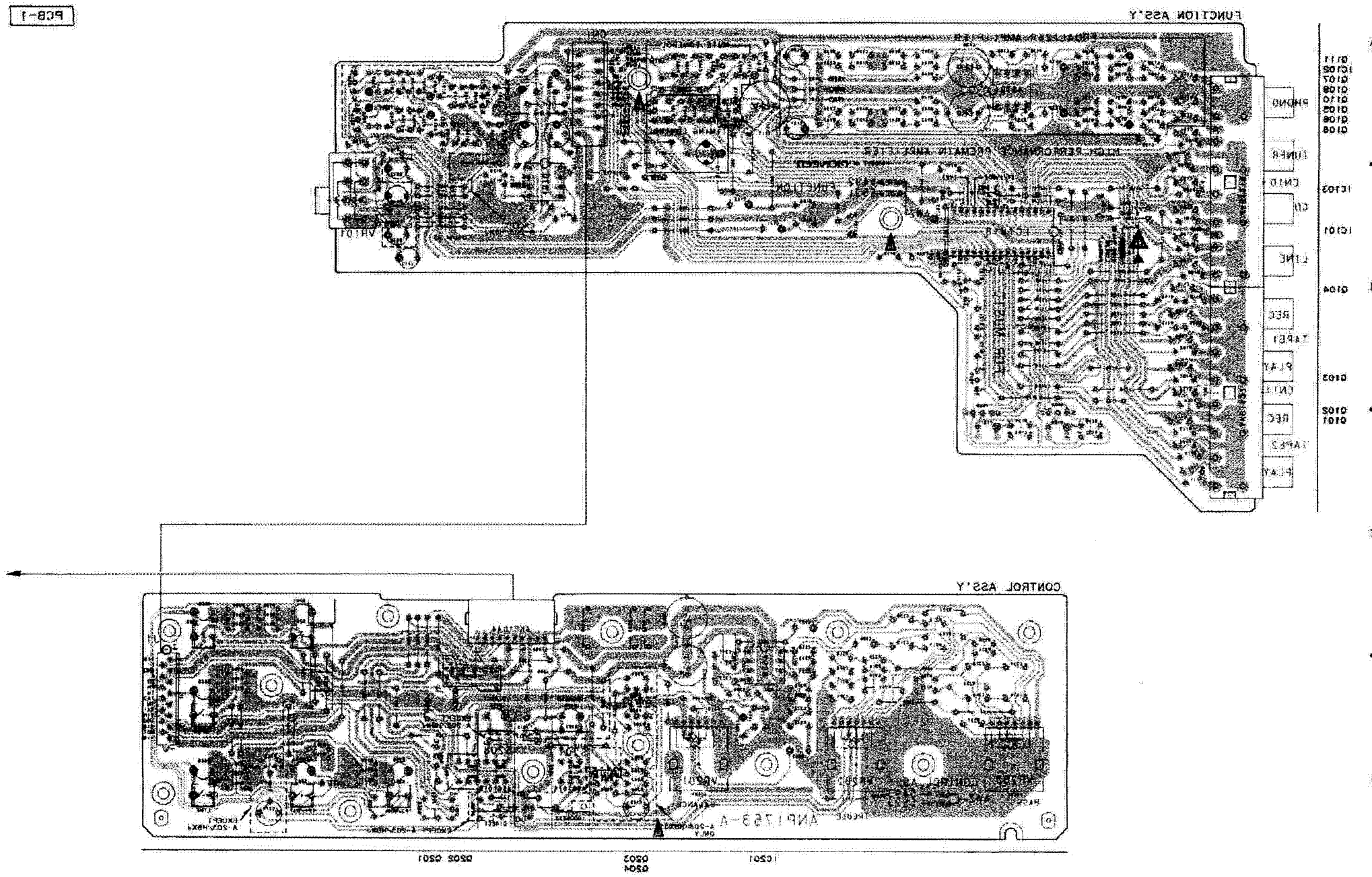

4. PCB CONNECTION DIAGRAMS

● This diagram is viewed from the foil side.

PCB-1

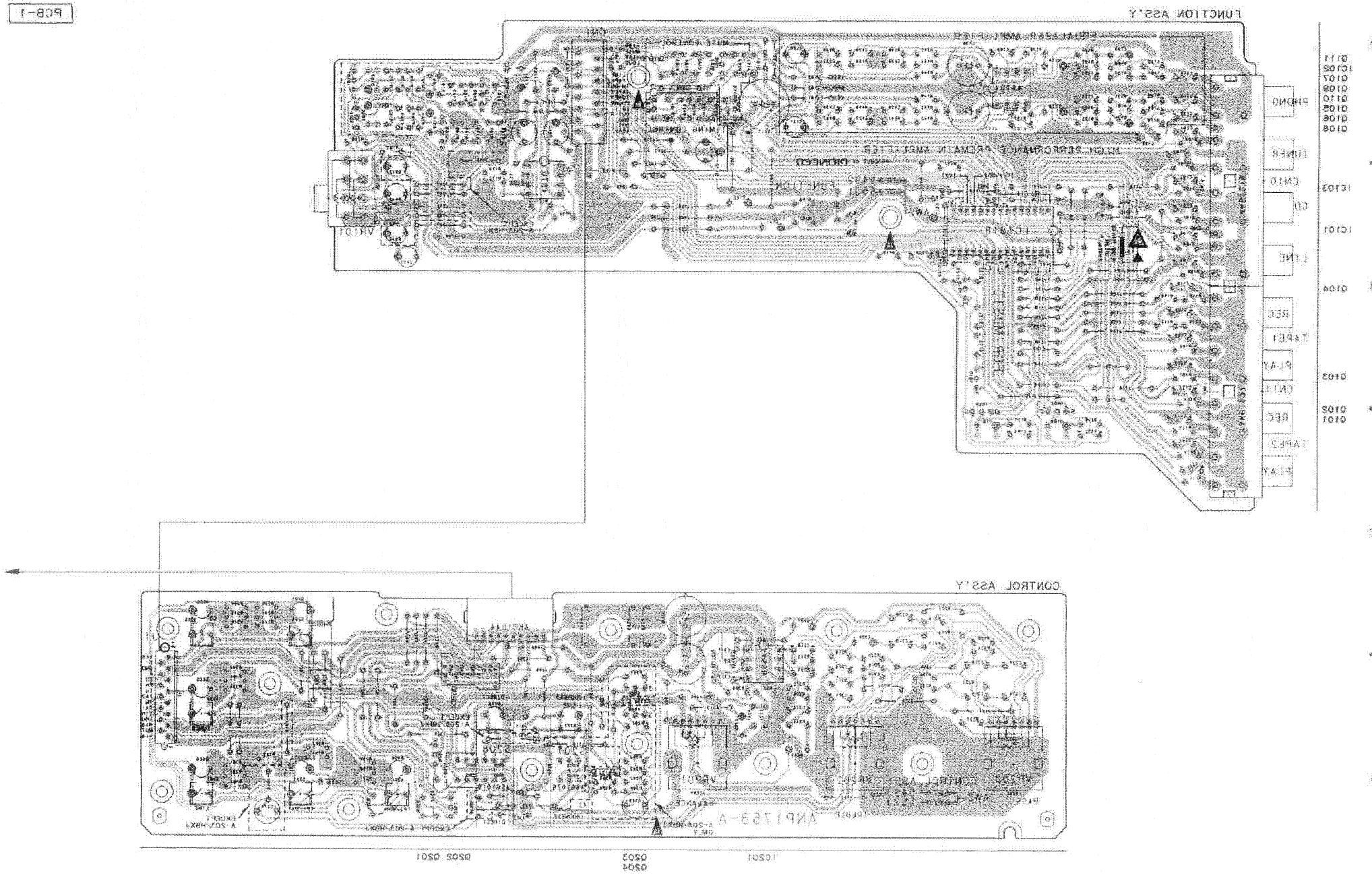

● This diagram is viewed from the mounted parts side.

PCB-1

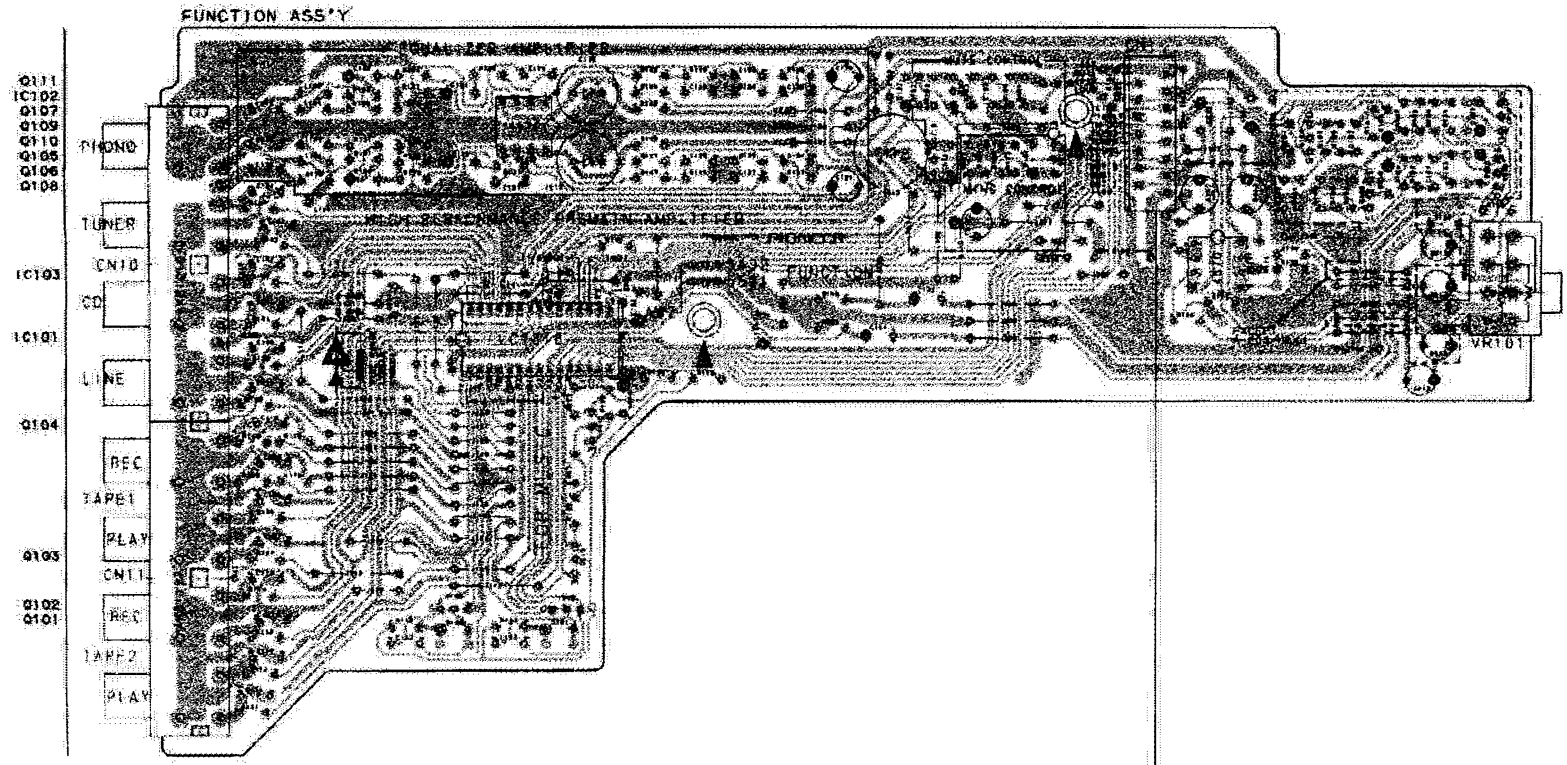

NOTE FOR PCB DIAGRAMS:

1. Part numbers in PCB diagrams match those in the schematic diagrams.
2. A comparison between the main parts of PCB and schematic diagrams is shown below.

Symbol in PCB Diagrams	Symbol in Schematic Diagrams	Part Name
Q504 (E) / Q504	Q504 / Q504	Transistor
D203 / D203	D203	Diode
C513 / C513	C513	Capacitor (Polarized)

3. The transistor terminal marked with E or ⊏ shows the emitter.
4. The diode terminal marked with ◎ or ⊂ shows cathode side.
5. The capacitor terminal marked with ◎ or ⊏ shows negative terminal.

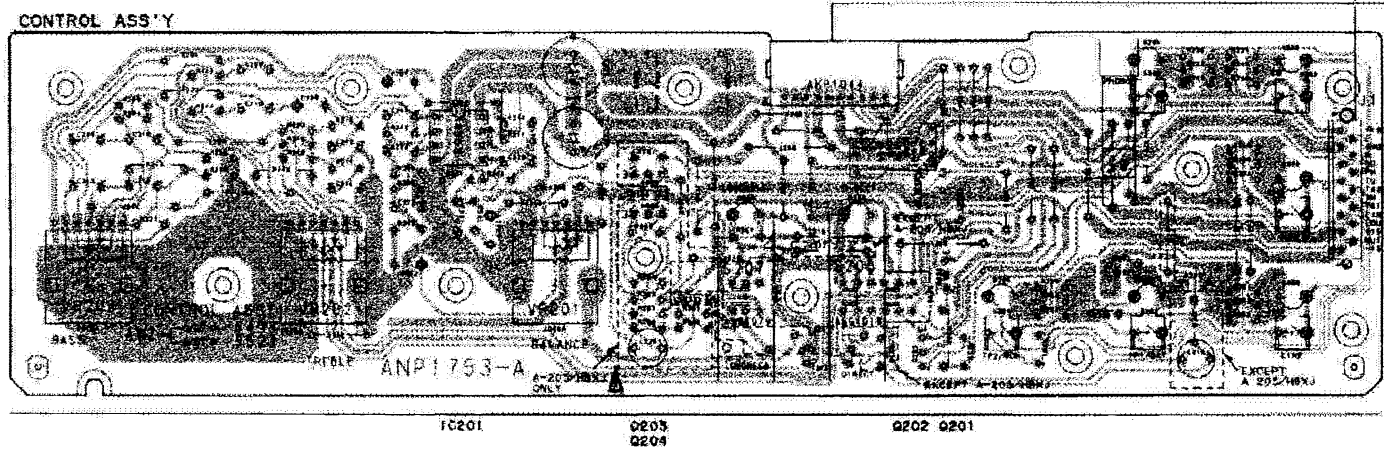

● This diagram is viewed from the mounted parts side.

PCB-1

FUNCTION ASS'Y

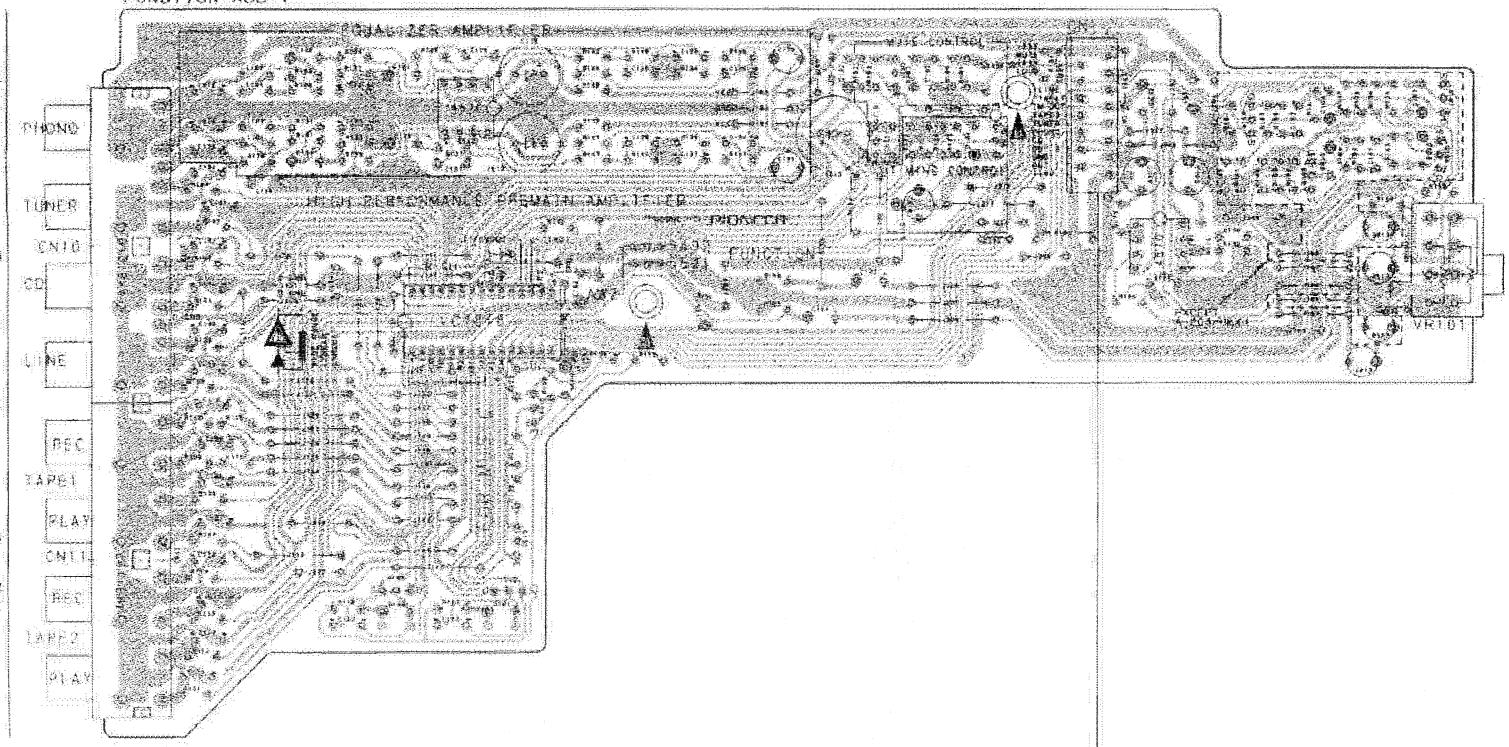

NOTE FOR PCB DIAGRAMS:

1. Part numbers in PCB diagrams match those in the schematic diagrams.
2. A comparison between the main parts of PCB and schematic diagrams is shown below.

Symbol in PCB Diagrams	Symbol in Schematic Diagrams	Part Name
Q504 (E)	Q504 Q504	Transistor
D203	D203	Diode
CS13	CS13	Capacitor (Polarized)

3. The transistor terminal marked with E or ⊏ shows the emitter.
4. The diode terminal marked with ◎ or ⊏ shows cathode side.
5. The capacitor terminal marked with ◎ or ⊏ shows negative terminal.

CONTROL ASS'Y

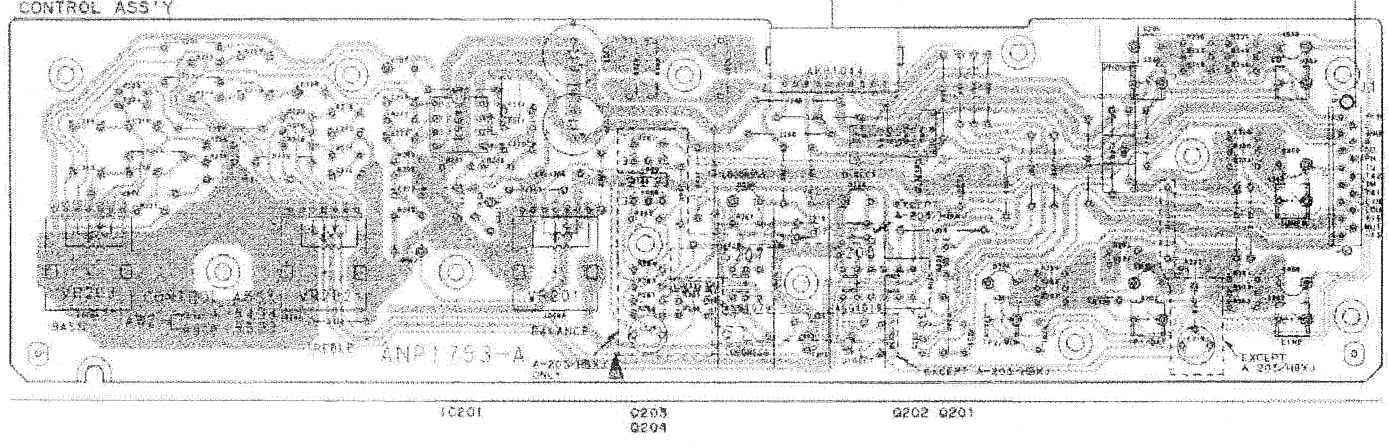

● This diagram is viewed from the mounted parts side.

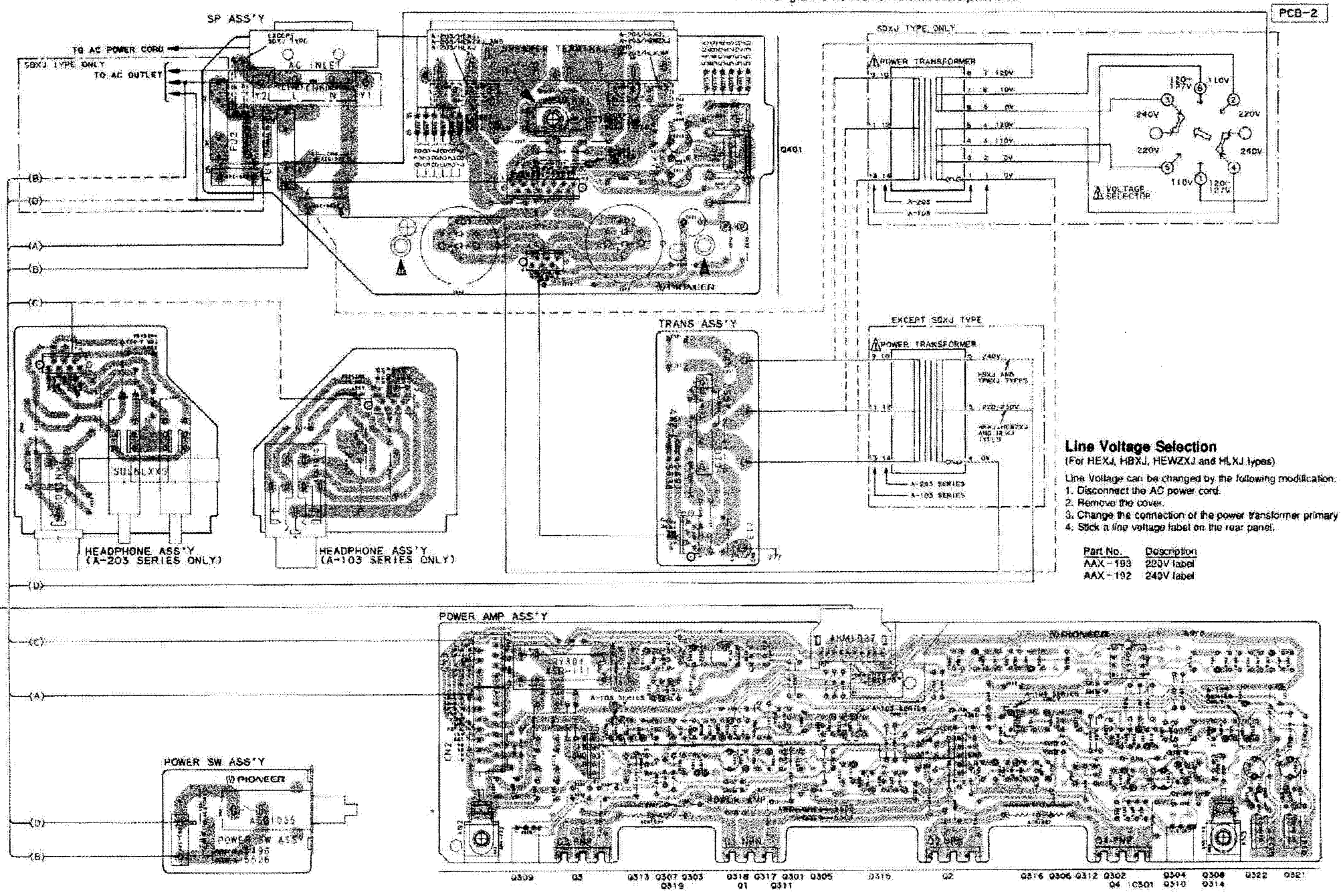

Line Voltage Selection

(For HEXJ, HBXJ, HEWZXJ and HLXJ types)

Line Voltage can be changed by the following modification:

1. Disconnect the AC power cord.
2. Remove the cover.
3. Change the connection of the power transformer primary taps.
4. Stick a line voltage label on the rear panel.

Part No.	Description
AAX-193	220V label
AAX-192	240V label

● This diagram is viewed from the mounted parts side.

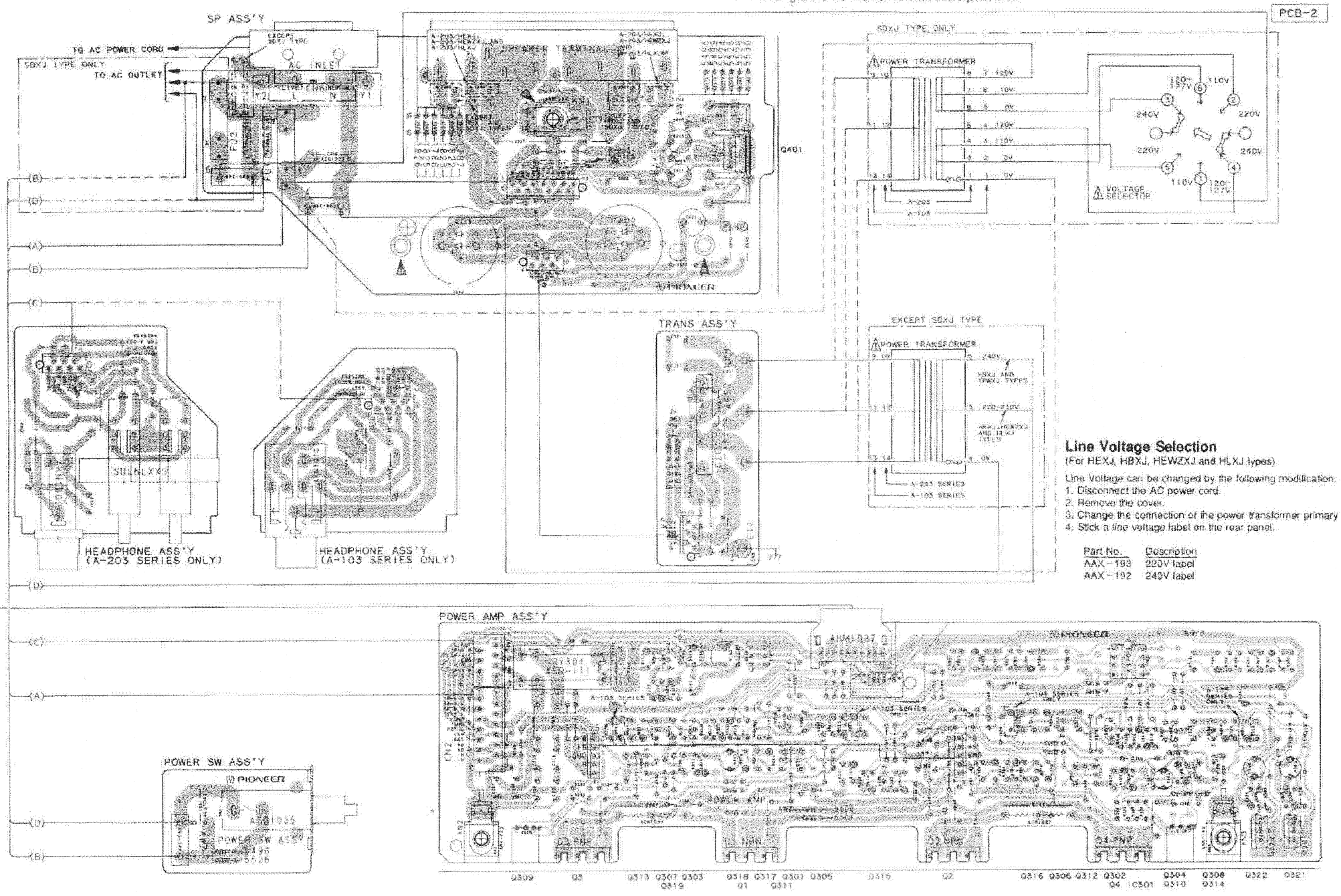

Line Voltage Selection

(For HEXJ, HBXJ, HEWZXJ and HLXJ types)

Line Voltage can be changed by the following modification:

1. Disconnect the AC power cord.
2. Remove the cover.
3. Change the connection of the power transformer primary taps.
4. Stick a line voltage label on the rear panel.

Part No.	Description
AAX-193	220V label
AAX-192	240V label

● This diagram is viewed from the foil side.

PCB-2

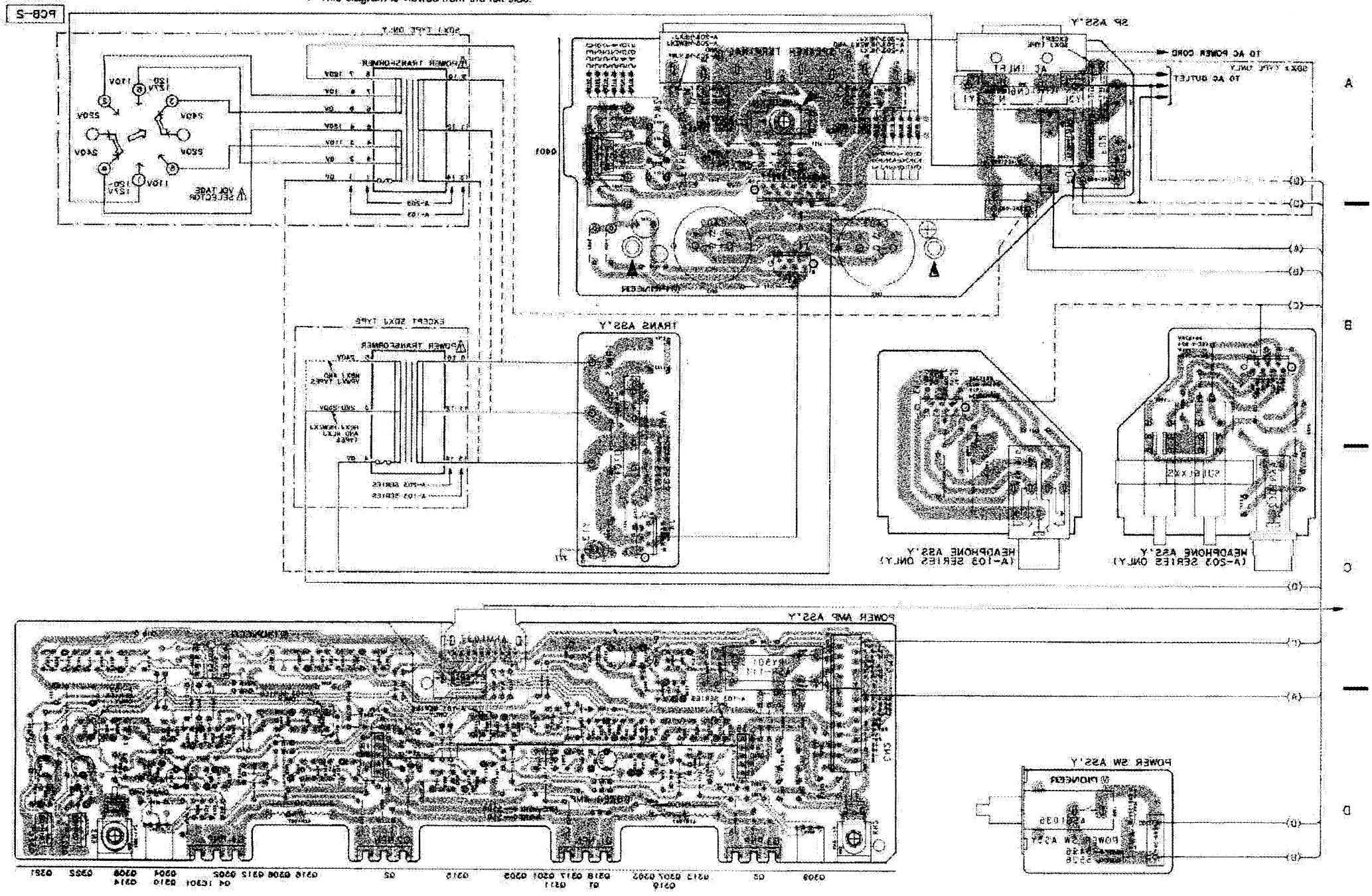

● This diagram is viewed from the foil side.

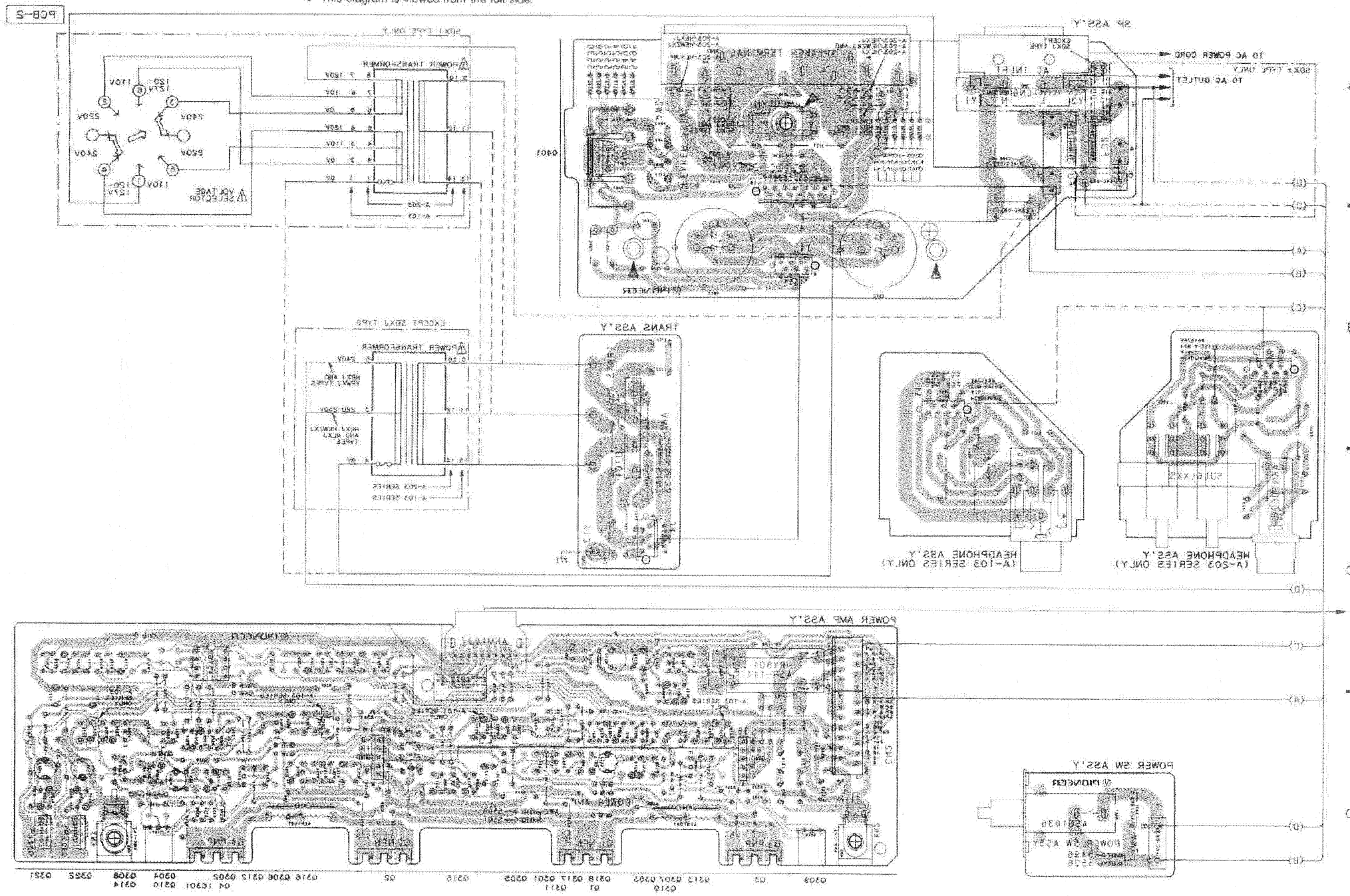

5. BLOCK DIAGRAM

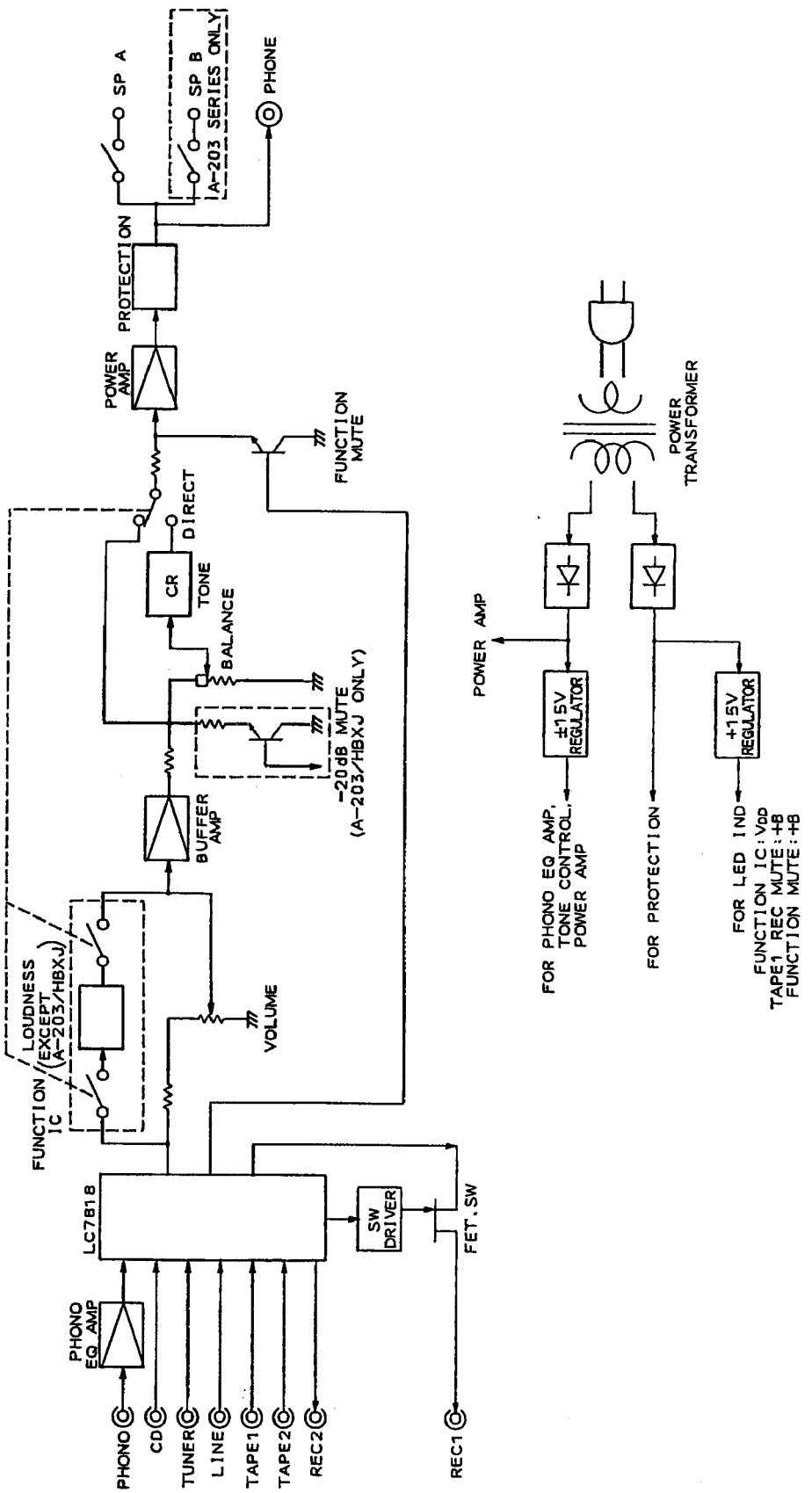

6. PCB PARTS LIST

NOTES:

- *Parts marked by "NSP" are generally unavailable because they are not in our Master Spare Parts List.*
- *The ⚠ mark found on some component parts indicates the importance of the safety factor of the part. Therefore, when replacing, be sure to use parts of identical designation.*
- *Parts marked by " ◉" are not always kept in stock. Their delivery time may be longer than usual or they may be unavailable.*
- *When ordering resistors, first convert resistance values into code form as shown in the following examples.*

Ex.1 When there are 2 effective digits (any digit apart from 0), such as 560 ohm and 47k ohm (tolerance is shown by J = 5%, and K = 10%).

560Ω	→	56×10^1 →	561	RD1/8PM[5][6][1]J
47kΩ	→	47×10^3 →	473	RD1/4PS[4][7][3]J
0.5Ω	→	0R5		RN2H[0][R][5]K
1Ω	→	010		RS1P[0][1][0]K

Ex.2 When there are 3 effective digits (such as in high precision metal film resistors).

5.62kΩ	→	562×10^1 →	5621	RN1/4PC[5][6][2][1]F

Mark	No.	Description	Parts No.	Mark
		LIST OF ASSEMBLIES		
NSP		AF ASSY (For A−203)	AWK1787	
		├ FUNCTION ASSY	AWZ5492	
		├ CONTROL ASSY	AWZ5493	
		├ HEADPHONE ASSY	AWZ5494	
		├ SP ASSY	AWZ5495	
		├ POWER SW ASSY	AWZ5496	
		├ TRANS ASSY	AWZ5497	
		└ POWER AMP ASSY	AWZ5500	
NSP		AF ASSY (For A−103)	AWK1788	
		├ FUNCTION ASSY	AWZ5492	
		├ CONTROL ASSY	AWZ5493	
		├ POWER SW ASSY	AWZ5496	
		├ HEADPHONE ASSY	AWZ5498	
		├ SP ASSY	AWZ5499	
		├ POWER AMP ASSY	AWZ5501	
		└ TRANS ASSY	AWZ5538	
		FUNCTION ASSY		
		SEMICONDUCTORS		
		IC101	LC7818	
		IC102,IC103	UPC4570C	
		Q104,Q111	2SA933S	
		Q103,Q110	2SC1740S	
		Q101,Q102,Q106−Q109	2SK246	
		Q105	DTA124ES	
		D101−D103,D106−D109	1SS252	
		D110	MTZJ20	
		D104,D105	MTZJ8.2	
		COILS AND FILTERS		
		L101−L104	LAU121K	
		L105,L106	LAU221K	
		CAPACITORS		
		C147,C148,C153,C154 (2.2/50)	ACH1260	
		C149,C150 (47/25)	ACH1261	
		C132,C133	CCCSL101J50	
		C156,C157	CCCSL151J50	
		C101−C114,C122,C123,C139	CCCSL221J50	
		C143,C144	CCCSL221J50	
		C118,C119	CCCSL330J50	
		C162	CEANP4R7M50	
		C136,C137	CEAS101M25	
		C115	CEAS102M16	
		C120,C121,C130,C131	CEAS2R2M50	
		C159,C160	CEAS2R2M50	
		C124,C125,C151,C152	CEAS470M25	
		C116	CEAS4R7M50	
		C138	CFTYA104J50	
		C155	CFTYA473J50	
		C117	CFTYA563J50	
		C145,C146	CFTYA823J50	
		C141,C142	CFTYA824J50	
		C161	CKCYF103Z50	
		C126,C127,C134,C135	CQMA222J50	
		C128,C129	CQMA822J50	
		RESISTORS		
	⚠	R182	RFA1/4PS4R7J	
		VR101 (100k−A5×2)	ACT1084	
		Other Resistors	RD1/8PM□□□J	
		OTHERS		
		CN11 (PIN JACK−8P)	AKB1127	
		CN10 (PIN JACK−8P)	AKB1219	
		CN1 CONNECTOR(15P)	KPE15	
		CONTROL ASSY		
		SEMICONDUCTORS		
		IC201	NJM4558DXP	
		Q201,Q202	2SC2878	
		D209 (Red)	AEL1065	
		D208 (Orange)	AEL1084	
		D201−D206 (Red)	AEL1148	
		SWITCHES AND RELAYS		
		S208	ASG1019	
		S201−S206	ASG1034	
		S207	ASG1079	
		CAPACITORS		
		C223,C224	CCCSL151J50	
		C217,C218	CCCSL271J50	
		C221,C222	CCCSL470J50	
		C219	CEANP220M35	
		C205,C206	CEAS2R2M50	

Mark	No.	Description	Parts No.	Mark
	C207,C208,C227,C228		CEAS470M25	
	C213,C214		CFTYA154J50	
	C211,C212		CFTYA184J50	
	C209,C210		CFTYA333J50	
	C215,C216		CFTYA824J50	
RESISTORS				
	R258−R260		RD1/4PM182J	
	VR202,VR203	(10k−20A×2)	ACS1113	
	VR201	(250k−B×2)	ACS1114	
		Other Resistors	RD1/8PM□□□J	
OTHERS				
	SOCKET	(10P)	AKP1044	

HEADPHONE ASSY

Mark	No.	Description	Parts No.	Mark
SWITCHES AND RELAYS				
	S501	(A−203 only)	SUL6LXXS	
CAPACITORS				
	C501,C502	(A−203 only)	CKCYB392K50	
	C503,C504	(A−103 only)	CKCYB392K50	
RESISTORS				
⚠	R501,R502	(A−203 only)	RS2LMF331J	
⚠	R505,R506	(A−103 only)	RS1LMF331J	
OTHERS				
	JACK (Headphone)	(For A−203)	AKN1002	
	JACK (Headphone)	(For A−103)	AKN1010	

SP ASSY

Mark	No.	Description	Parts No.	Mark
SEMICONDUCTORS				
	Q401		2SC4793	
	D405		1SS252	
	D404		RD16ESB2	
	D402,D403		S5566	
CAPACITORS				
⚠	C409	(0.01/400)	ACG1002	
	C401,C402	(6800/50) (For A−203)	ACH1105	
	C401,C402	(4700/42) (For A−103)	ACH1269	
	C407		CEAS101M50	
	C410,C411		CEAS470M50	
	C403,C404		CKCYB472K50	
	C405,C406	(A−203 only)	CKCYB472K50	
RESISTORS				
⚠	R401,R403		RFA1/4PS4R7J	
		Other Resistors	RD1/4PM□□□J	
OTHERS				
	SCREW		ABA−298	
	SPEAKER TERMINAL 8−P	(For A−203)	AKE1011	
	SPEAKER TERMINAL 4−P	(For A−103)	AKE1054	
⚠	CN6	(AC INLET−1P)	AKP1132	

POWER SW ASSY

Mark	No.	Description	Parts No.	Mark
SWITCHES AND RELAYS				
⚠	S601		ASG1035	
CAPACITORS				
⚠	C601	(0.01/400)	ACG1002	

TRANS ASSY

Mark	No.	Description	Parts No.	Mark
SEMICONDUCTORS				
	D701	(For A−203)	D5SB20F	
	D701	(For A−103)	D3SBA20	
CAPACITORS				
	C701,C702		CFTYA824J50	
RESISTORS				
⚠	R702		RFA1/4PS100J	
⚠		Other Resistors	RD1/4PM□□□J	

POWER AMP ASSY

Mark	No.	Description	Parts No.	Mark
SEMICONDUCTORS				
	IC301		UPC4570C	
	Q305,Q306		2SA1145	
	Q322		2SA1837	
	Q313,Q314		2SA965	
	Q303,Q304		2SA992	
	Q317,Q318		2SC1740S	
	Q301,Q302,Q315,Q316		2SC1845	
	Q311,Q312		2SC2235	
	Q319		2SC2240	
	Q309,Q310		2SC2458	
	Q307,Q308		2SC2705	
	Q321		2SC4793	
	D301−D308,D313−D322		1SS252	
	D326,D327		1SS252	
	D323		MTZJ13	
	D329−D332	(A−103 only)	MTZJ3.3	
	D309−D312		MTZJ6.2A	
	D324,D325		RD16ESB2	
SWITCHES AND RELAYS				
	RY301		ASR−111	
CAPACITORS				
	C301,C302,C313,C314	(2.2/50)	ACH1260	
	C331,C332	(47/25)	ACH1261	
	C305,C306,C324,C325	(100/25)	ACH1262	
	C309−C312		CCCSL560K500	
	C326		CEAS101M25	
	C318		CEAS2R2M50	
	C317		CEAS471M6	
	C315,C316		CEAS4R7M50	
	C327,C328		CFTYA104J50	
	C319−C322		CFTYA224J50	
	C329,C330		CKCYB102K50	
	C303,C304		CKCYB471K50	
RESISTORS				
⚠	R347,R348	(0.33/5W)	ACN−139	
⚠	R362,R363	(For A−203)	RD1/2PMF331J	
⚠	R362,R363	(For A−103)	RD1/2PMF271J	
⚠	R369,R370		RD1/2PMFL4R7J	
⚠	R385		RD1/4PMF100J	
⚠	R357		RD1/4PMF101J	
⚠	R349,R350		RD1/4PMF222J	
⚠	R337−R340		RD1/8MMF101J	
⚠	R341,R342		RD1/8MMF271J	
⚠	R367,R368		RD1/8MMF4R7J	

Mark	No.	Description	Parts No.	Mark
⚠	R323 – R326		RD1/8MMF511J	
⚠	R327 – R330		RD1/8MMF680J	
	R371,R372 (For A – 203)		RDR1/4PM392J	
	R371,R372 (For A – 103)		RDR1/4PM332J	
⚠	R343 – R346		RFA1/4PS4R7J	
	R331,R332		RN1/4PC1501F	
	R335,R336		RN1/4PC6800F	
	Other Resistors		RD1/8PM□□□J	
OTHERS				
	PLUG	(10P)	AKM1037	
	CN2	CONNECTOR(13P)	KPE13	
	CN3	CONNECTOR(7P)	KPE7	

7. IC INFORMATION

● The information shown in the list is basic information and may not correspond exactly to that shown in the schematic diagrams.

■ LC7818 (IC101)
Input Selector IC

●Block diagram

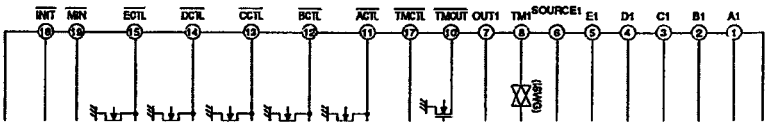

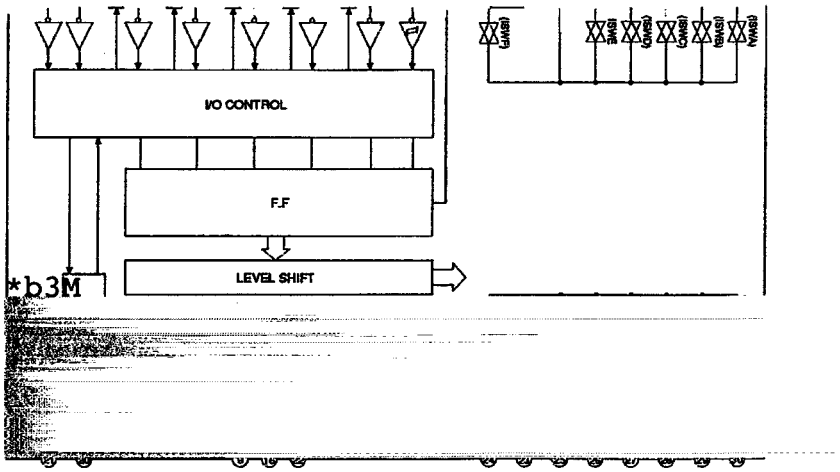

●Pin Function

No.	Name	Function
1	A1	Audio signal input
2	B1	
3	C1	
4	D1	
5	E1	
6	SOURCE1	Recording output
7	OUT1	Audio signal output
8	TM1	Audio signal input
9	VEE	1. When power supply (+) is used: VSS=VEE=GND 2. When power supply (+−) is used: VSS=GND, VEE=(-)V
10	$\overline{\text{TMOUT}}$	TM ON/OFF display LED driver output
11	$\overline{\text{ACTL}}$	Input/output pin for analog switch control and display LED driver output
12	$\overline{\text{BCTL}}$	
13	$\overline{\text{CCTL}}$	
14	$\overline{\text{DCTL}}$	
15	$\overline{\text{ECTL}}$	
16	VSS	1. When power supply (+) is used: VSS=VEE=GND 2. When power supply (+−) is used: VSS=GND, VEE=(-)V

No.	Name	Function
17	$\overline{\text{TMCTL}}$	TM control input
18	$\overline{\text{INIT}}$	Mode setting input Operations According to the Combination of $\overline{\text{INIT}}$ and $\overline{\text{MIN}}$ Inputs
19	$\overline{\text{MIN}}$	

$\overline{\text{INIT}}$	$\overline{\text{MIN}}$	Operations
H	M	Localization
H	L	Backup
H	H	Auto function
L	M	Mute
L	L	Initialize (Circuit A)
L	H	Reset

No.	Name	Function
20	CR	Clock oscillation input/output Connected to C1 and R1
21	MUTE	Mute control output
22	VDD	Power supply
23	TM2	Audio signal input
24	OUT2	Audio signal output
25	SOURCE2	Recording output
26	E2	Audio signal input
27	D2	
28	C2	
29	B2	
30	A2	

8. FOR A-203/HBXJ, HEWZXJ, HLXJ, SDXJ, A-103/HBXJ, HEWZXJ, HLXJ, SDXJ AND YPWXJ

NOTES:
- *Parts marked by "NSP" are generally unavailable because they are not in our Master Spare Parts List.*
- *The ⚠ mark found on some component parts indicates the importance of the safety factor of the part. Therefore, when replacing, be sure to use parts of identical designation.*
- *Parts marked by " ◉" are not always kept in stock. Their delivery time may be longer than usual or they may be unavailable.*

8.1 CONTRAST OF MISCELLANEOUS PARTS FOR A-203/HBXJ, HEWZXJ, HLXJ AND SDXJ.

A-203/HBXJ, HEWZXJ, HLXJ, SDXJ and A-203/HEXJ have the same construction except for the following:

Mark	Symbol & Description	Part No.					Remarks
		A-203 HEXJ	A-203 HBXJ	A-203 HEWZXJ	A-203 HLXJ	A-203 SDXJ	
NSP	AF assembly	AWK1787	AWK1822	AWK1787	AWK1787	AWK1823	
	FUNCTION assembly	AWZ5492	AWZ5521	AWZ5492	AWZ5492	AWZ5492	
	CONTROL assembly	AWZ5493	AWZ5523	AWZ5493	AWZ5493	AWZ5493	
	SP assembly	AWZ5495	AWZ5524	AWZ5495	AWZ5495	AWZ5525	
	POWER SW assembly	AWZ5496	AWZ5526	AWZ5496	AWZ5496	AWZ5496	
⚠	T1 Power transformer (AC220−230V/240V)	ATS1538	ATS1538	ATS1538	ATS1538	.....	
⚠	T1 Power transformer (AC110V/120−127V/220V/240V)	.....	.....	.....	.....	ATS1539	
⚠	Voltage selector (AC110V/120−127V/220V/240V)	.....	.....	.....	.....	AKX−507	Refer to page5.
⚠	AC outlet	.....	.....	.....	.....	AKP−515	Refer to page5.
⚠	FU2 Fuse (1.25A)	.....	.....	.....	.....	REK1023	Refer to page5.
⚠	AC power cord	ADG1154	ADG1156	ADG1154	ADG1154	ADG1158	
	Rear panel	ANC2173	ANC2174	ANC2172	ANC2201	ANC2175	
	Insulator (for front/rear)	PNW1912	PNW1912	PNW1912	.....	.....	
	Insulator (for front)	.....	.....	.....	DXA1490	DXA1490	
	Foot (for rear)	.....	.....	.....	AEC1505	AEC1505	
	Front panel	AMB2231	AMB2233	AMB2231	AMB2231	AMB2231	
	Operating instructions (English/French/German/Italian/ Swedish/Spanish/Dutch/ Portuguese)	ARE1302	.....	.....	.....	.....	
	Operating instructions (English)	.....	ARB1468	.....	.....	.....	
	Operating instructions (German)	.....	.....	ARC1455	.....	.....	
	Operating instructions (English/Chinese)	.....	.....	.....	ARE1300	.....	
	Operating instructions (English/Spanish/Chinese)	.....	.....	.....	.....	ARE1301	
	Packing case	AHD2672	AHD2672	AHD2672	AHD2701	AHD2701	

FUNCTION ASSEMBLY

AWZ5521 and AWZ5492 have the same construction except for the following:

Mark	Symbol & Description	Part No.		Remarks
		AWZ5492	AWZ5521	
	D106−D109	1SS252	.....	
	Q106−Q109	2SK246	.....	
	R159, R160	RD1/8PM104J	.....	
	R161, R162	RD1/8PM273J	.....	
	R163, R164	RD1/8PM393J	.....	
	R165−R168	RD1/8PM105J	.....	
	R175−R178	RD1/8PM475J	.....	
	C143, C144	CCCSL221J50	.....	
	C145, C146	CFTXA823J50	.....	
	C159, C160	CEAS2R2M50	.....	

CONTROL ASSEMBLY

AWZ5523 and AWZ5493 have the same construction except for the following:

Mark	Symbol & Description	Part No.		Remarks
f 3M		AWZ5493	AWZ5523	
	Q203, Q204	.....	2SC2878	
	R238	RD1/8PM103J	.....	
	R261, R262	.....	RD1/8PM100J	
	R263, R264	.....	RD1/8PM103J	
	R265, R267	.....	RD1/8PM332J	
	R266	.....	RD1/8PM153J	
	R268	.....	RD1/8PM333J	
	C219	CEANP220M35	.....	
	C225	.....	CEANP4R7M50	

SP ASSEMBLY

AWZ5524, AWZ5525 and AWZ5495 have the same construction except for the following:

Mark	Symbol & Description	Part No.			Remarks
		AWZ5495	AWZ5524	AWZ5525	
	C403−C406	CKCYB472K50	.....	.....	
	Speaker terminal 8−P	AKE1011	AKE1036	AKE1011	
⚠	CN6 (AC INLET−1P)	AKP1132	AKP1133	AKP1132	

POWER SW ASSEMBLY

Although AWZ5526 and AWZ5496 are different in part number, they have the same service parts.

8.2 CONTRAST OF MISCELLANEOUS PARTS FOR A-103/HBXJ, HEWZXJ, HLXJ SDXJ AND YPWXJ.

A-103/HBXJ, HEWZXJ, HLXJ, SDXJ, YPWXJ and A-103/HEXJ have the same construction except for the following:

Mark	Symbol & Description	Part No.						Remarks
		A-103 HEXJ	A-103 HBXJ	A-103 HEWZXJ	A-103 HLXJ	A-103 SDXJ	A-103 YPWXJ	
NSP	AF assembly	AWK1788	AWK1825	AWK1788	AWK1788	AWK1826	AWK1788	
	SP assembly	AWZ5499	AWZ5529	AWZ5499	AWZ5499	AWZ5530	AWZ5499	
	POWER SW assembly	AWZ5496	AWZ5526	AWZ5496	AWZ5496	AWZ5496	AWZ5496	
⚠	T1 Power transformer (AC220−230V/240V)	ATS1540	ATS1540	ATS1540	ATS1540	.....	ATS1540	
⚠	T1 Power transformer (AC110V/120−127V/220V/240V)	.....	.....	.....	.....	ATS1541	.....	
⚠	Voltage selector (AC110V/120−127V/220V/240V)	.....	.....	.....	.....	AKX−507	.....	Refer to page5.
⚠	AC outlet	.....	.....	.....	.....	AKP−515	.....	Refer to page5.
⚠	FU2 Fuse (800mA)	.....	.....	.....	.....	REK1021	.....	Refer to page5.
⚠	AC power cord	ADG1154	ADG1156	ADG1154	ADG1154	ADG1158	ADG1160	
	Rear panel	ANC2177	ANC2178	ANC2176	ANC2202	ANC2179	ANC2178	
	Insulator	PNW1912	PNW1912	PNW1912	.....	.....	.....	
	Foot	.....	.....	.....	AEC1505	AEC1505	AEC1505	
	Front panel	AMB2232	AMB2232	AMB2232	AMB2234	AMB2234	AMB2234	
	Operating instructions (English/French/German/Italian/ Swedish/Spanish/Dutch/ Portuguese)	ARE1302	.....	.....	.....	.....	.....	
	Operating instructions (English)	.....	ARB1468	.....	.....	.....	ARB1468	
	Operating instructions (German)	.....	.....	ARC1455	.....	.....	.....	
	Operating instructions (English/Chinese)	.....	.....	.....	ARE1300	.....	.....	
	Operating instructions (English/Spanish/Chinese)	.....	.....	.....	.....	ARE1301	.....	
	Packing case	AHD2673	AHD2673	AHD2673	AHD2702	AHD2702	AHD2673	

SP ASSEMBLY

AWZ5529, AWZ5530 and AWZ5499 have the same construction except for the following:

Mark	Symbol & Description	Part No.			Remarks
		AWZ5499	AWZ5529	AWZ5530	
	C403, C404	CKCYB472K50	.....	.....	
⚠	CN6 (AC INLET−1P)	AKP1132	AKP1133	AKP1132	

POWER SW ASSEMBLY

Although AWZ5526 and AWZ5496 are different in part number, they have the same service parts.

9. PANEL FACILITIES

1 The illustration shows model A-203.

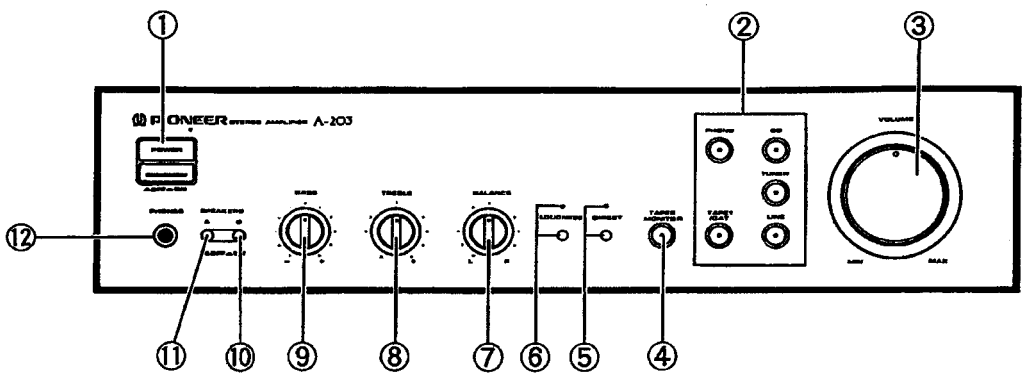

Model A-103 is not equipped with ⑩ and ⑪.

FRONT PANEL See Fig. 1

① POWER switch

Press to turn power to the unit ON and OFF.

bOW

② Input Selector switch/indicator

Use to select the playback source.

PHONO:
For record playback with a turntable.

CD:
For compact disc playback with a CD player.

TUNER:
For AM or FM broadcast reception with a tuner.

LINE:
Set to this position when listening to the programs from a component connected to the LINE terminals.

TAPE 1/DAT:
For playback with a cassette deck or digital audio tape deck connected to the TAPE 1/DAT terminals.

③ VOLUME control

Use to adjust the volume level.

④ TAPE 2 MONITOR switch/indicator

Use when there is an adaptor component (graphic equalizer, etc.) or cassette deck connected to the TAPE 2 MONITOR terminals.

ON:
Indicator lights when using the adaptor component or listening to the cassette deck.

OFF:
Indicator goes out when not in use.

NOTE:

- *When no connections are made to the TAPE 2 MONITOR terminals, or when they are not in use, be sure to set this switch to the OFF position. (No sound will be heard if it is set to the ON position.)*
- *When the TAPE 2 MONITOR indicator is on and the input selector switch is not set to TAPE 1/DAT, the signals which are input through TAPE 2 MONITOR are then output at TAPE 1/DAT REC OUT.*

⑤ DIRECT switch/indicator

Use this switch when you do not wish to pass the output from input terminal equipment through the various frequency adjusting circuits (BASS, TREBLE, BALANCE, LOUDNESS.)

ON:
The indicator lights: The signals input through the input terminals are reproduced without passing through the various frequency adjusting circuits. This results in flat, pure sound which is a more faithful reproduction of the input source.

OFF:
The indicator goes out: The signal passes through the various frequency adjusting circuits.

⑥ MUTING button/indicator (Only U.K. model of A-203)

Use to temporarily cut sound volume.

ON: (Red illumination)
The indicator lights. The sound volume will be reduced −20dB.

OFF:
The indicator goes off. The sound will return to its previous volume.

⑥ LOUDNESS switch/indicator (Except U.K. model of A-203)

Use when listening at low volume levels.

ON:
The indicator lights: Boosts low and high frequencies to give added punch to playback even at low volume levels.

OFF:
The indicator goes off: Should normally be left in this position.

NOTE:
This control does not operate when the DIRECT switch is in the ON position.

⑦ BALANCE control

Should normally be left in the center position. Adjust the balance if the sound is louder from one of the speakers. If the right side is louder, turn toward the L (left) position and if the left side is louder, turn toward the R (right) position.

NOTE:
This control does not operate when the DIRECT switch is in the ON position.

⑧ TREBLE tone control

Use to adjust the high-frequency tone. The center position is the flat (normal) position. When turned to the right, high-frequency tone is emphasized; when turned to the left, high-frequency tone is de-emphasized.

NOTE:

This control does not operate when the DIRECT switch is in the ON position.

⑨ BASS tone control

Use to adjust the low-frequency tone. The center position is the flat (normal) position. When turned to the right, low-frequency tone is emphasized; when turned to the left, low-frequency tone is de-emphasized.

NOTE:

This control does not operate when the DIRECT switch is in the ON position.

⑩ SPEAKERS B selector switch (A-203 only)

Use this switch to listen to the speaker system connected to the SPEAKERS B terminals.

ON (▬):

Depressed position: Sound is heard from the speaker system.

OFF (■):

Released position: No sound is heard from the speaker system. Set to this position when listening with headphones

⑪ SPEAKERS A selector switch (A-203 only)

Use this switch to listen to the speaker system connected to the SPEAKERS A terminals.

ON (▬):

Depressed position: Sound is heard from the speaker system.

OFF (■):

Released position: No sound is heard from the speaker system. Set to this position when listening with headphones.

⑫ PHONES jack

When using headphones, insert the plug into this jack.

With model A-103 the output to the speakers is cut automatically when connecting headphones.

10. SPECIFICATIONS

[A-203]

Amplifier Section

Continuous power output
(both channels driven at 20 Hz to 20 kHz)**
T.H.D. 0.07 %, 8 Ω ····· 35 W + 35 W*
T.H.D. 0.1 %, 4 Ω ····· 40 W + 40 W*
DIN Continuous power output (both channels driven at 1 kHz)
T.H.D. 1.0 %, 8 Ω ····· 45 W + 45 W
T.H.D. 1.0 %, 4 Ω ····· 55 W + 55 W
Dynamic power output (E.I.A. test signal)
4 Ω ····· 66 W
Total harmonic distortion**
20 Hz to 20 kHz, 17,5 W, 8 Ω ····· 0.05 %*
• *Above specifications are for when power supply is 230 V.*
Input sensitivity/impedance
PHONO (MM) ····· 2.8 mV/50 kΩ
CD, TUNER, LINE, TAPE 1/DAT, TAPE 2 MONITOR ····· 200 mV/50 kΩ
PHONO overload level
1 kHz, T.H.D. 0.1 % (MM) ····· 150 mV
Output level/impedance
TAPE REC, ADPT OUT ····· 200 mV/1 kΩ
Frequency response
PHONO (MM) ····· 20 Hz to 20 kHz ±0.5 dB
CD, TUNER, LINE, TAPE 1/DAT, TAPE 2 MONITOR,
····· 5 Hz to 100 kHz $^{+0}_{-3}$ dB*
Tone control
BASS ····· ± 8 dB (100 Hz)
TREBLE ····· ± 8 dB (10 kHz)
Loudness contour (volume control set at −30 dB position)
Australian model only
····· +5 dB (100 Hz)/+3 dB (10 kHz)
Signal-to-Noise ratio (IHF short circuit, A network)
PHONO (MM, 5 mV input) ····· 82 dB*
CD, TUNER, LINE, TAPE 1/DAT, TAPE 2 MONITOR ····· 105 dB*
Signal-to-Noise ratio (DIN, continuous power/50 mW)
PHONO (MM) ····· 68 dB/64 dB*
CD, TUNER, LINE, TAPE 1/DAT, TAPE 2 MONITOR ····· 85 dB/67 dB*

Power Supply/Miscellaneous

Power requirements ····· AC 220 − 230 Volts, 50/60 Hz
Power consumption ····· 330 W
Dimensions (including knobs and other protruding parts)
····· 420 (W) × 312 (D) × 110 (H) mm
Weight (without package) ····· 5.2 kg

Accessories

Operating instructions ····· 1

NOTE:
Specifications and design subject to possible modification without notice, due to improvements.

* Measured with the DIRECT switch set to ON.
** Measured by Audio Spectrum Analyzer.

[A-103]

Amplifier Section

Continuous power output
(both channels driven at 20 Hz to 20 kHz)**
T.H.D. 0.1 %, 8 Ω ····· 25 W + 25 W*
DIN Continuous power output (both channels driven at 1 kHz)
T.H.D. 1.0 %, 8 Ω ····· 30 W + 30 W
Total harmonic distortion**
20 Hz to 20 kHz, 12,5 W, 8 Ω ····· 0.05 %*
• *Above specifications are for when power supply is 230 V.*
Input sensitivity/impedance
PHONO (MM) ····· 2.8 mV/50 kΩ
CD, TUNER, LINE, TAPE 1/DAT, TAPE 2 MONITOR ····· 200 mV/50 kΩ
PHONO overload level
1 kHz, T.H.D. 0.1 % (MM) ····· 150 mV
Output level/impedance
TAPE REC, ADPT OUT ····· 200 mV/1 kΩ
Frequency response
PHONO (MM) ····· 20 Hz to 20 kHz ±0.5 dB
CD, TUNER, LINE, TAPE 1/DAT, TAPE 2 MONITOR,
····· 5 Hz to 100 kHz $^{+0}_{-3}$ dB*
Tone control
BASS ····· ± 8 dB (100 Hz)
TREBLE ····· ± 8 dB (10 kHz)
Loudness contour (volume control set at −30 dB position)
····· +5 dB (100 Hz)/+3 dB (10 kHz)
Signal-to-Noise ratio (IHF short circuit, A network)
PHONO (MM, 5 mV input) ····· 82 dB*
CD, TUNER, LINE, TAPE 1/DAT, TAPE 2 MONITOR ····· 105 dB*
Signal-to-Noise ratio (DIN, continuous power/50 mW)
PHONO (MM) ····· 68 dB/64 dB*
CD, TUNER, LINE, TAPE 1/DAT, TAPE 2 MONITOR ····· 85 dB/67 dB*

Power Supply/Miscellaneous

Power requirements ····· AC 220 − 230 Volts, 50/60 Hz
Power consumption ····· 210 W
Dimensions (including knobs and other protruding parts)
····· 420 (W) × 312 (D) × 110 (H) mm
Weight (without package) ····· 4,2 kg

Accessories

Operating instructions ····· 1

NOTE:
Specifications and design subject to possible modification without notice, due to improvements.

* Measured with the DIRECT switch set to ON.
** Measured by Audio Spectrum Analyzer.